Deutsches Institut für Bautechnik DIBt

Member of EOTA
www.eota.eu

Approval body for construction products and types of construction

Bautechnisches Prüfamt

An institution established by the Federal and Laender Governments

Designated according to Article 29 of Regulation (EU) No 305/2011 and member of EOTA (European Organisation for Technical Assessment)

European Technical Assessment

ETA-13/0177 of 23 March 2018

English translation prepared by DIBt - Original version in German language

General Part

Technical Assessment Body issuing the European Technical Assessment:	Deutsches Institut für Bautechnik
Trade name of the construction product	Fasting Screws JA, JZ, JT und JF
Product family to which the construction product belongs	Fastening screws for sandwich panels
Manufacturer	EJOT Baubefestigungen GmbH In der Stockwiese 35 57334 Bad Laasphe DEUTSCHLAND
Manufacturing plant	EJOT manufacturing plants 2, 8, 12, 13, 15 - 18, 31
This European Technical Assessment contains	50 pages including 43 annexes which form an integral part of this assessment
This European Technical Assessment is issued in accordance with Regulation (EU) No 305/2011, on the basis of	EAD 330047-01-0602

The European Technical Assessment is issued by the Technical Assessment Body in its official language. Translations of this European Technical Assessment in other languages shall fully correspond to the original issued document and shall be identified as such.

Communication of this European Technical Assessment, including transmission by electronic means, shall be in full. However, partial reproduction may only be made with the written consent of the issuing Technical Assessment Body. Any partial reproduction shall be identified as such.

This European Technical Assessment may be withdrawn by the issuing Technical Assessment Body, in particular pursuant to information by the Commission in accordance with Article 25(3) of Regulation (EU) No 305/2011.

Specific Part

1 Technical description of the product

The fastening screws for sandwich panels are self-drilling and self-tapping screws listed in Table 1. The fastening screws for sandwich panels are made of stainless steel. They are partly completed with metallic washers and EPDM sealing rings. For details see the appropriate Annexes.

Table 1 – Fastening screws for sandwich panels

Annex	Fastening screw	Component I	Component II
4	JT3-D-6H-5,5/6,3xL JT6-D-6H-5,5/6,3xL JT3-D-FR-6H-5,5/6,3xL JT6-D-FR-6H-5,5/6,3xL	S280GD to S350GD	S235 to S355 S280GD to S450GD HX300LAD to HX460LAD
5	JT3-D-6H-5,5/6,3xL JT6-D-6H-5,5/6,3xL JT3-D-FR-6H-5,5/6,3xL JT6-D-FR-6H-5,5/6,3xL	S280GD to S350GD	S235 to S355 S280GD to S450GD HX300LAD to HX460LAD
6	JT3-D-6H-5,5/6,3xL JT6-D-6H-5,5/6,3xL JT3-D-FR-6H-5,5/6,3xL JT6-D-FR-6H-5,5/6,3xL	S280GD to S350GD	S235 to S355 S280GD to S450GD HX300LAD to HX460LAD
7	JT3-D-12H-5,5/6,3xL JT6-D-12H-5,5/6,3xL JT3-D-FR-12H-5,5/6,3xL JT6-D-FR-12H-5,5/6,3xL	S280GD to S350GD	S235 to S355 S280GD to S350GD
8	JT3-D-12H-5,5/6,3xL JT6-D-12H-5,5/6,3xL JT3-D-FR-12H-5,5/6,3xL JT6-D-FR-12H-5,5/6,3xL	S280GD to S350GD	S235 to S355 S280GD to S350GD
9	JT3-D-12H-5,5/6,3xL JT6-D-12H-5,5/6,3xL JT3-D-FR-12H-5,5/6,3xL JT6-D-FR-12H-5,5/6,3xL	S280GD to S350GD	S235 to S355 S280GD to S350GD
10	JT3-D-18H-5,5/6,3xL JT6-D-18H-5,5/6,3xL JT3-D-FR-18H-5,5/6,3xL JT6-D-FR-18H-5,5/6,3xL	S280GD to S350GD	S235 to S355 S280GD to S350GD
11	JT3-D-18H-5,5/6,3xL JT6-D-18H-5,5/6,3xL JT3-D-FR-18H-5,5/6,3xL JT6-D-FR-18H-5,5/6,3xL	S280GD to S350GD	S235 to S355 S280GD to S350GD
12	JT3-D-18H-5,5/6,3xL JT6-D-18H-5,5/6,3xL JT3-D-FR-18H-5,5/6,3xL JT6-D-FR-18H-5,5/6,3xL	S280GD to S350GD	S235 to S355 S280GD to S350GD
13	JT3-2-6,0xL JT6-2-6,0xL JT3-FR-2-6,0xL JT6-FR-2-6,0xL	S280GD to S350GD	S280GD to S350GD

Annex	Fastening screw	Component I	Component II
14	JT3-2-6,0xL JT6-2-6,0xL JT3-FR-2-6,0xL JT6-FR-2-6,0xL	S280GD to S350GD	S280GD to S350GD
15	JT3-2-6,0xL JT6-2-6,0xL JT3-FR-2-6,0xL JT6-FR-2-6,0xL	S280GD to S350GD	S280GD to S350GD
16	JT3-6-5,5xL JT6-6-5,5xL JT3-FR-6-5,5xL JT6-FR-6-5,5xL	S280GD to S350GD	S235 to S355 S280GD to S450GD HX300LAD to HX460LAD
17	JT3-6-5,5xL JT6-6-5,5xL JT3-FR-6-5,5xL JT6-FR-6-5,5xL	S280GD to S350GD	S235 to S355 S280GD to S450GD HX300LAD to HX460LAD
18	JT3-6-5,5xL JT6-6-5,5xL JT3-FR-6-5,5xL JT6-FR-6-5,5xL	S280GD to S350GD	S235 to S355 S280GD to S450GD HX300LAD to HX460LAD
19	JT3-12-5,5xL JT6-12-5,5xL JT3-FR-12-5,5xL JT6-FR-12-5,5xL	S280GD to S350GD	S235 to S355 S280GD to S350GD
20	JT3-12-5,5xL JT6-12-5,5xL JT3-FR-12-5,5xL JT6-FR-12-5,5xL	S280GD to S350GD	S235 to S355 S280GD to S350GD
21	JT3-12-5,5xL JT6-12-5,5xL JT3-FR-12-5,5xL JT6-FR-12-5,5xL	S280GD to S350GD	S235 to S355 S280GD to S350GD
22	JT3-18-5,5xL JT6-18-5,5xL JT3-FR-18-5,5xL JT6-FR-18-5,5xL	S280GD to S350GD	S235 to S355 S280GD to S350GD
23	JT3-18-5,5xL JT6-18-5,5xL JT3-FR-18-5,5xL JT6-FR-18-5,5xL	S280GD to S350GD	S235 to S355 S280GD to S350GD
24	JT3-18-5,5xL JT6-18-5,5xL JT3-FR-18-5,5xL JT6-FR-18-5,5xL	S280GD to S350GD	S235 to S355 S280GD to S350GD
25	JZ3-6,3xL JZ5-6,3xL	S280GD to S350GD	S235 to S355 S280GD to S450GD HX300LAD to HX460LAD
26	JZ3-6,3xL JZ5-6,3xL	S280GD to S350GD	S235 to S355 S280GD to S450GD HX300LAD to HX460LAD
27	JZ3-6,3xL JZ5-6,3xL	S280GD to S350GD	S235 to S355 S280GD to S450GD HX300LAD to HX460LAD

Annex	Fastening screw	Component I	Component II
28	JZ3-8,0xL JZ5-8,0xL	S280GD to S350GD	S235 to S355 S280GD to S350GD
29	JZ7-6,3xL	S280GD to S350GD	S235 to S355 S280GD to S350GD
30	JZ7-6,3xL	S280GD to S350GD	S235 to S355 S280GD to S350GD
31	JZ7-6,3xL	S280GD to S350GD	S235 to S355 S280GD to S350GD
32	JT3-2-6,5xL JT6-2-6,5xL	S280GD to S350GD	timber
33	JT3-2-6,5xL JT6-2-6,5xL	S280GD to S350GD	Timber
34	JT3-2-6,5xL JT6-2-6,5xL	S280GD to S350GD	Timber
35	JT3-D-2H-6,5/7,0xL JT6-D-2H-6,5/7,0xL JT3-D-FR-2H-6,5/7,0xL JT6-D-FR-2H-6,5/7,0xL	S280GD to S350GD	Timber
36	JT3-D-2H-6,5/7,0xL JT6-D-2H-6,5/7,0xL JT3-D-FR-2H-6,5/7,0xL JT6-D-FR-2H-6,5/7,0xL	S280GD to S350GD	Timber
37	JT3-D-2H-6,5/7,0xL JT6-D-2H-6,5/7,0xL JT3-D-FR-2H-6,5/7,0xL JT6-D-FR-2H-6,5/7,0xL	S280GD to S350GD	Timber
38	JA3-6,5xL	S280GD to S350GD	Timber
39	JA3-6,5xL	S280GD to S350GD	Timber
40	JA3-6,5xL	S280GD to S350GD	Timber
41	JF3-6,8xL JF6-6,8xL JF3-FR-6,8xL JF6-FR-6,8xL	S280GD to S350GD	Timber
42	JF3-6,8xL JF6-6,8xL JF3-FR-6,8xL JF6-FR-6,8xL	S280GD to S350GD	Timber
43	JF3-6,8xL JF6-6,8xL JF3-FR-6,8xL JF6-FR-6,8xL	S280GD to S350GD	Timber

2 Specification of the intended use in accordance with the applicable European Assessment Document

The fastening screws are intended to be used for fastening sandwich panels to metal or timber substructures. The sandwich panel can either be used as wall or roof cladding or as load bearing wall and roof element. The intended use comprises fastening screws and connections for indoor and outdoor applications. Fastening screws which are intended to be used in external environments with ≥C2 corrosion according to the standard EN ISO 12944-2 are made of stainless steel. Furthermore the intended use comprises connections with predominantly static loads (e.g. wind loads, dead loads). The fastening screws are not intended for re-use.

The performances given in Section 3 are only valid if the fastening screws are used in compliance with the specifications and conditions given in Annex (1-43).

The verification and assessment methods on which this European Technical Assessment is based lead to the assumption of a working life of the fastening screws of at least 25 years. The indications given on the working life cannot be interpreted as a guarantee given by the manufacturer, but are to be regarded only as a means for choosing the right products in relation to the expected economically reasonable working life of the works.

3 Performance of the product and references to the methods used for its assessment

3.1 Mechanical resistance and stability (BWR 1)

Essential characteristic	Performance
Shear Resistance of the Connection	see Annexes to this ETA
Tension Resistance of the Connection	see Annexes to this ETA
Design Resistance in case of combined Tension and Shear Forces (interaction)	see Annexes to this ETA
Check of Bending Capacity in case of constraining forces due to temperature	see Annexes to this ETA
Durability	No performance assessed

3.2 Safety in case of fire (BWR 2)

Essential characteristic	Performance
Reaction to fire	Performance Class A1 in accordance with EC decision96/603/EC (as amended)

4 Assessment and verification of constancy of performance (AVCP) system applied, with reference to its legal base

In accordance with EAD No. 330047-01-0602, the applicable European legal act is: Commission Decision 1998/214/EC, amended by 2001/596/EC.

The system to be applied is: 2+

5 Technical details necessary for the implementation of the AVCP system, as provided for in the applicable EAD

Technical details necessary for the implementation of the AVCP system are laid down in the control plan deposited at Deutsches Institut für Bautechnik.

Issued in Berlin on 23 March 2018 by Deutsches Institut für Bautechnik

BD Dipl.-Ing. Andreas Kummerow
Head of Department

beglaubigt:
Schult

Examples of execution and connection

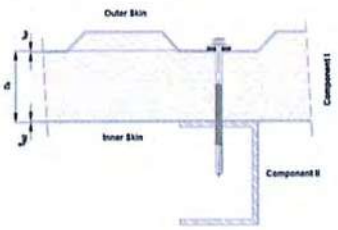

Component II made of metal

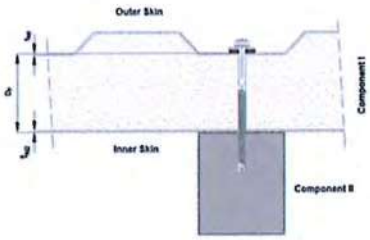

Component II made of timber

Materials and dimensions

Design relevant materials and dimensions are indicated in the Annexes of the fastening screws:

Fastener	Material of the fastening screw
Washer	Material of the sealing washer
Component I	Material of the sandwich panel (outer skin and inner skin)
Component II	Material of substructure
D_f	Thickness of component I
t_{N1}	Thickness of the outer skin of component I
t_{N2}	Thickness of the inner skin of component II
$t_{N,II}$	Thickness of component II made of metal
l_{ef}	Effective screw-in length in component II made of timber (without drill point)
l_g	Screw-in length in component II made of timber (with drill point)
d_{pd}	Pre-drill diameter of component I and II

The thickness $t_{N,II}$ corresponds to the load-bearing screw-in length of the fastening screw in component II, if the load-bearing screw-in length does not cover the entire component thickness.

Performance characteristics

The design relevant performance characteristics of a connection are indicated in the Annexes of the fastening screws:

$N_{R,k}$	Characteristic value of tension resistance
$V_{R,k}$	Characteristic value of shear resistance
u	Maximum allowed head displacement of the fastening screw

In some cases component-specific performance characteristics are indicated for an individual calculation of the design relevant performance characteristics of a connection:

$N_{R,I,k}$	Characteristic value of pull-through resistance for the outer skin of component I
$N_{R,II,k}$	Characteristic value of pull-out resistance for component II
$V_{R,I,k}$	Characteristic value of hole bearing resistance for the inner skin of component I
$V_{R,II,k}$	Characteristic value of hole bearing resistance for component II
$M_{y,Rk}$	Characteristic value of yield moment of the fastening screw for component II made of timber
$f_{ax,k}$	Characteristic value of withdrawal strength for component II made of timber
$f_{h,k}$	Charakteristic value of embedding strength for component II made of timber

Terms and explanations	Annex 1
Fastening screws for sandwich panels	

Occurred loadings of a connection

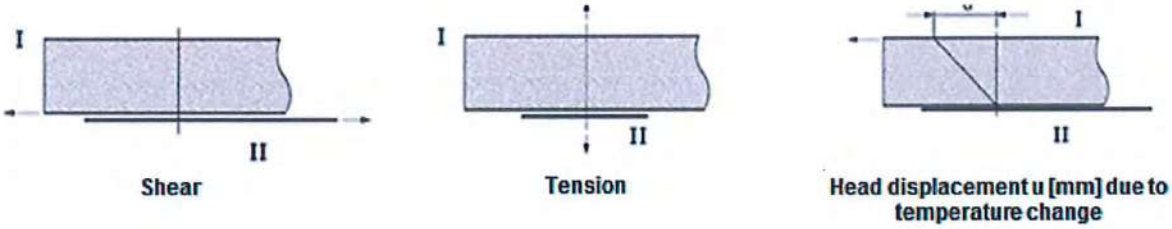

Design values

The design values of tension and shear resistance of a connection have to be determined as following:

$N_{R,d}$	Design value of tension resistance
$V_{R,d}$	Design value of shear resistance
γ_M	Partial safety factor

The recommended partial safety factor γ_M is 1,33, provided no partial safety factor is given in national regulations or national Annexes to Eurocode 3.

Special conditions

If the component thickness t_{N1}, t_{N2} or $t_{N,II}$ lies in between two indicated component thicknesses, the characteristic value may be calculated by linear interpolation.

For asymmetric components II made of metal (e.g. Z- or C-shaped profiles) with component thickness $t_{N,II} < 5$ mm, the characteristic value $N_{R,k}$ has to be reduced to 70%.

In case of combined loading by tension and shear forces the following interaction equation has to be taken into account:

$$\frac{N_{S,d}}{N_{R,d}} + \frac{V_{S,d}}{V_{R,d}} \leq 1{,}0$$

$N_{S,d}$	Design value of the applied tension forces
$V_{S,d}$	Design value of the applied shear forces

Head displacement

The head displacement of the fastening screw as a result of thermal expansion of the outer skin of the sandwich panel may not exceed the maximum allowed head displacement of the fastening screw.

Installation conditions

The installation is carried out according to manufacturer´s instruction.
The load-bearing screw-in length of the fastening screw specified by the manufacturer has to be taken into account.
The fastening screws have to be processed with suitable drill driver (e.g. cordless drill driver with depth control). The use of impact wrench is not allowed.
The fastening screws have to be fixed rectangular to the surface of the component.
Component I and component II have to be in direct contact to each other. The use of compression resistant thermal insulation strips up to a thickness of 3 mm is allowed.

Design and installation	Annex 2
Fastening screws for sandwich panels	

Component II made of timber

The characteristic values of tension and shear resistance:

$$N_{R,k} = min\begin{cases} N_{R;I,k} \\ N_{R,II,k} * k_{mod} \end{cases} \qquad V_{R,k} = min\begin{cases} V_{R;I,k} \\ V_{R,II,k} * k_{mod} \end{cases}$$

$N_{R,I,k}$ and $V_{R,I,k}$ are given in the Annex of the fastening screw.

$N_{R,II,k}$ is determined according to EN 1995-1-1:2014 + A1:2008, equation (8.40a), with $f_{ax,k}$ given in the Annex of the fastening screw.

$V_{R,II,k}$ is determined according to EN 1995-1-1:2004 + A1:2008, equation (8.9), with $M_{Y,Rk}$ given in the Annex of the fastening screw and $f_{h,k}$ according to EN 1995-1-1:2014 + A1:2008, equation (8.15) and equation (8.16).

Additional provisions	Annex 3
Fastening screws for sandwich panels	

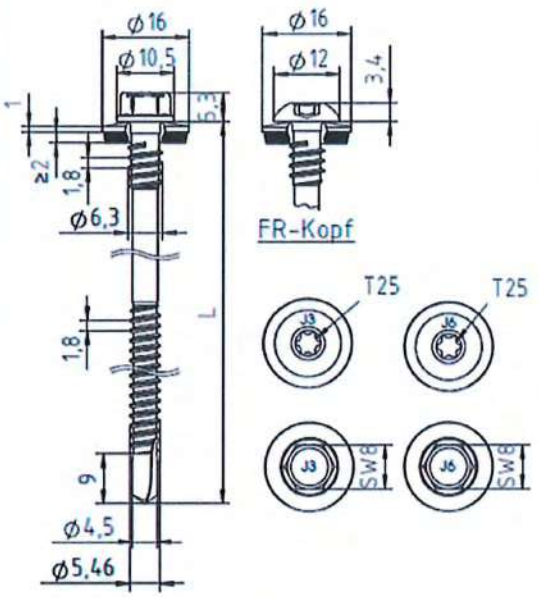

Materials:

Fastener: stainless steel (A2) – EN ISO 3506
stainless steel (A4) – EN ISO 3506

Washer: stainless steel (A2/A4) – EN ISO 3506
with vulcanised EPDM seal

Component I: S280GD to S350GD – EN 10346

Component II: S235 to S355 – EN 10025-1
S280GD to S450GD – EN 10346
HX300LAD to HX460LAD – EN 10346

Drilling capacity: $\Sigma(t_{N2} + t_{N,II}) \leq 6{,}50$ mm

Timber substructures:

no performance determined

	$t_{N,II}$ [mm]	1,50	2,00	2,50	3,00	4,00	5,00	—	—	—	—	—
$V_{R,k}$ [kN] for t_{N2} =	0,40	0,60*	0,60*	0,60*	0,60*	0,60*	0,60*	—	—	—	—	—
	0,50	1,50*	1,50*	1,50*	1,50*	1,50*	1,50*	—	—	—	—	—
	0,55	1,50*	1,50*	1,50*	1,50*	1,50*	1,50*	—	—	—	—	—
	0,60	1,56*	1,56*	1,56*	1,56*	1,56*	1,56*	—	—	—	—	—
	0,63	1,60*	1,60*	1,60*	1,60*	1,60*	1,60*	—	—	—	—	—
	0,75	2,70	2,70	2,70	2,70	2,70	2,70	—	—	—	—	—
	0,88	2,70	2,70	2,70	2,70	2,70	2,70	—	—	—	—	—
	1,00	2,70	2,70	2,70	2,70	2,70	2,70	—	—	—	—	—
$N_{R,k}$ [kN] for t_{N1} =	0,40	1,57*	1,57*	1,57*	1,57*	1,57*	1,57*	—	—	—	—	—
	0,50	1,70*	1,70*	1,70*	1,70*	1,70*	1,70*	—	—	—	—	—
	0,55	1,90	2,00*	2,00*	2,00*	2,00*	2,00*	—	—	—	—	—
	0,60	1,90	2,13*	2,13*	2,13*	2,13*	2,13*	—	—	—	—	—
	0,63	1,90	2,20*	2,20*	2,20*	2,20*	2,20*	—	—	—	—	—
	0,75	1,90	2,60	3,40*	3,40*	3,40*	3,40*	—	—	—	—	—
	0,88	1,90	2,60	4,10	4,10	4,10	4,10	—	—	—	—	—
	1,00	1,90	2,60	4,20	4,90	4,90	4,90	—	—	—	—	—
$N_{R,k,II}$ [kN]		1,90	2,60	4,20	4,90	4,90	4,90	—	—	—	—	—
max u [mm] for D_F =	40	20,0	15,5	7,0	7,0	7,0	6,0	—	—	—	—	—
	60	26,0	21,5	11,0	11,0	10,0	8,0	—	—	—	—	—
	80	31,5	27,0	16,0	16,0	15,0	13,0	—	—	—	—	—
	100	37,5	33,0	21,5	21,5	19,0	16,0	—	—	—	—	—
	120	40,0	38,5	27,0	27,0	23,0	20,0	—	—	—	—	—
	140	40,0	40,0	32,5	32,5	26,0	23,0	—	—	—	—	—
	≥ 160	40,0	40,0	32,5	32,5	26,0	23,0	—	—	—	—	—

- $N_{R,k,II}$: Pull-out resistance of component II
- For t_{N2} made of S320GD or S350GD the values $V_{R,k}$ marked with * can be increased by 8,3%.
- For t_{N1} made of S320GD or S350GD the values $N_{R,k}$ marked with * can be increased by 8,3%.

Fastening screws for sandwich panels

Self-drilling screw JT3-D-(FR-)6H-5,5/6,3xL, JT6-D-(FR-)6H-5,5/6,3xL
with hexagon head or round head with Torx® drive system and sealing washer Ø16 mm

Annex 4

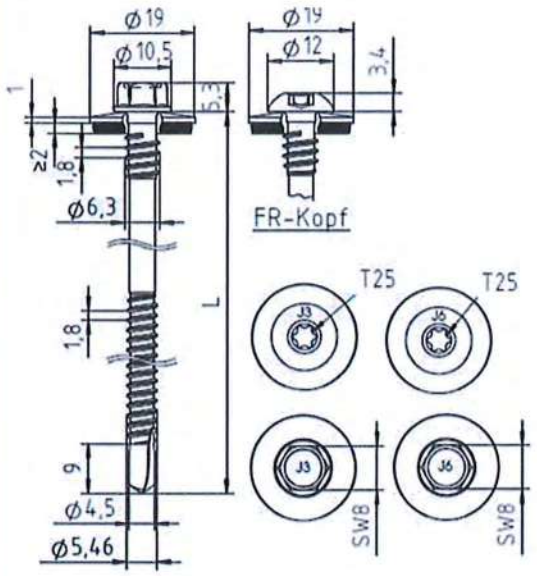

Materials:

Fastener: stainless steel (A2) – EN ISO 3506
stainless steel (A4) – EN ISO 3506

Washer: stainless steel (A2/A4) – EN ISO 3506
with vulcanised EPDM seal

Component I: S280GD to S350GD – EN 10346

Component II: S235 to S355 – EN 10025-1
S280GD to S450GD – EN 10346
HX300LAD to HX460LAD – EN 10346

Drilling capacity: $\Sigma(t_{N2} + t_{N,II}) \leq 6{,}50$ mm

Timber substructures:

no performance determined

	$t_{N,II}$ [mm]	1,50	2,00	2,50	3,00	4,00	5,00	—	—	—	—	—
$V_{R,k}$ [kN] for t_{N2} =	0,40	0,60*	0,60*	0,60*	0,60*	0,60*	0,60*	—	—	—	—	—
	0,50	1,50*	1,50*	1,50*	1,50*	1,50*	1,50*	—	—	—	—	—
	0,55	1,50*	1,50*	1,50*	1,50*	1,50*	1,50*	—	—	—	—	—
	0,60	1,56*	1,56*	1,56*	1,56*	1,56*	1,56*	—	—	—	—	—
	0,63	1,60*	1,60*	1,60*	1,60*	1,60*	1,60*	—	—	—	—	—
	0,75	2,70	2,70	2,70	2,70	2,70	2,70	—	—	—	—	—
	0,88	2,70	2,70	2,70	2,70	2,70	2,70	—	—	—	—	—
	1,00	2,70	2,70	2,70	2,70	2,70	2,70	—	—	—	—	—
$N_{R,k}$ [kN] for t_{N1} =	0,40	1,86	1,86*	1,86*	1,86*	1,86*	1,86*	—	—	—	—	—
	0,50	1,90	2,02*	2,02*	2,02*	2,02*	2,02*	—	—	—	—	—
	0,55	1,90	2,45	2,45*	2,45*	2,45*	2,45*	—	—	—	—	—
	0,60	1,90	2,60	2,89*	2,89*	2,89*	2,89*	—	—	—	—	—
	0,63	1,90	2,60	3,15*	3,15*	3,15*	3,15*	—	—	—	—	—
	0,75	1,90	2,60	3,40*	3,40*	3,40*	3,40*	—	—	—	—	—
	0,88	1,90	2,60	4,10	4,10*	4,10*	4,10*	—	—	—	—	—
	1,00	1,90	2,60	4,20	4,90	4,90	4,90	—	—	—	—	—
$N_{R,k,II}$ [kN]		1,90	2,60	4,20	4,90	4,90	4,90	—	—	—	—	—
max u [mm] for D_F =	40	20,0	15,5	7,0	7,0	7,0	6,0	—	—	—	—	—
	60	26,0	21,5	11,0	11,0	10,0	8,0	—	—	—	—	—
	80	31,5	27,0	16,0	16,0	15,0	13,0	—	—	—	—	—
	100	37,5	33,0	21,5	21,5	19,0	16,0	—	—	—	—	—
	120	40,0	38,5	27,0	27,0	23,0	20,0	—	—	—	—	—
	140	40,0	40,0	32,5	32,5	26,0	23,0	—	—	—	—	—
	≥ 160	40,0	40,0	32,5	32,5	26,0	23,0	—	—	—	—	—

- $N_{R,k,II}$: Pull-out resistance of component II
- For t_{N2} made of S320GD or S350GD the values $V_{R,k}$ marked with * can be increased by 8,3%.
- For t_{N1} made of S320GD or S350GD the values $N_{R,k}$ marked with * can be increased by 8,3%.

Fastening screws for sandwich panels

Self-drilling screw JT3-D-(FR-)6H-5,5/6,3xL, JT6-D-(FR-)6H-5,5/6,3xL
with hexagon head or round head with Torx® drive system and sealing washer Ø19 mm

Annex 5

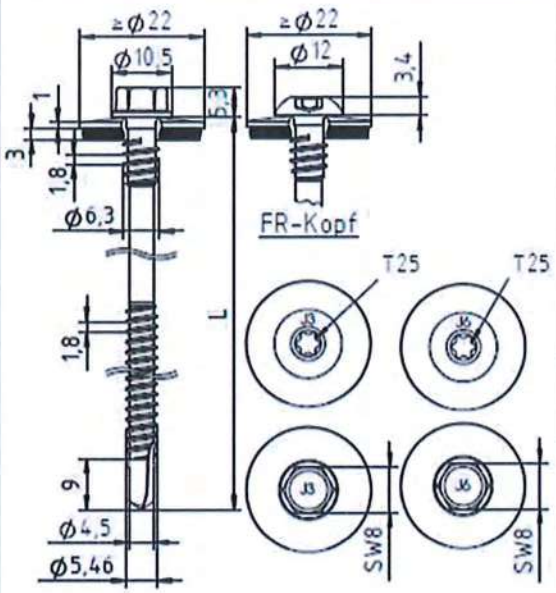

Materials:

Fastener: stainless steel (A2) – EN ISO 3506
stainless steel (A4) – EN ISO 3506

Washer: stainless steel (A2/A4) – EN ISO 3506
with vulcanised EPDM seal

Component I: S280GD to S350GD – EN 10346

Component II: S235 to S355 – EN 10025-1
S280GD to S450GD – EN 10346
HX300LAD to HX460LAD – EN 10346

Drilling capacity: $\Sigma(t_{N2} + t_{N,II}) \leq 6{,}50$ mm

Timber substructures:

no performance determined

	$t_{N,II}$ [mm]	1,50	2,00	2,50	3,00	4,00	5,00	—	—	—	—	—
$V_{R,k}$ [kN] for t_{N2} =	0,40	0,60*	0,60*	0,60*	0,60*	0,60*	0,60*	—	—	—	—	—
	0,50	1,50*	1,50*	1,50*	1,50*	1,50*	1,50*	—	—	—	—	—
	0,55	1,50*	1,50*	1,50*	1,50*	1,50*	1,50*	—	—	—	—	—
	0,60	1,56*	1,56*	1,56*	1,56*	1,56*	1,56*	—	—	—	—	—
	0,63	1,60*	1,60*	1,60*	1,60*	1,60*	1,60*	—	—	—	—	—
	0,75	2,70	2,70	2,70	2,70	2,70	2,70	—	—	—	—	—
	0,88	2,70	2,70	2,70	2,70	2,70	2,70	—	—	—	—	—
	1,00	2,70	2,70	2,70	2,70	2,70	2,70	—	—	—	—	—
$N_{R,k}$ [kN] for t_{N1} =	0,40	1,90	2,16*	2,16*	2,16*	2,16*	2,16*	—	—	—	—	—
	0,50	1,90	2,28*	2,28*	2,28*	2,28*	2,28*	—	—	—	—	—
	0,55	1,90	2,60	2,71*	2,71*	2,71*	2,71*	—	—	—	—	—
	0,60	1,90	2,60	3,14*	3,14*	3,14*	3,14*	—	—	—	—	—
	0,63	1,90	2,60	3,40*	3,40*	3,40*	3,40*	—	—	—	—	—
	0,75	1,90	2,60	3,40*	3,40*	3,40*	3,40*	—	—	—	—	—
	0,88	1,90	2,60	4,10	4,10*	4,10*	4,10*	—	—	—	—	—
	1,00	1,90	2,60	4,20	4,90	4,90	4,90	—	—	—	—	—
$N_{R,k,II}$ [kN]		1,90	2,60	4,20	4,90	4,90	4,90	—	—	—	—	—
max u [mm] for D_F =	40	20,0	15,5	7,0	7,0	7,0	6,0	—	—	—	—	—
	60	26,0	21,5	11,0	11,0	10,0	8,0	—	—	—	—	—
	80	31,5	27,0	16,0	16,0	15,0	13,0	—	—	—	—	—
	100	37,5	33,0	21,5	21,5	19,0	16,0	—	—	—	—	—
	120	40,0	38,5	27,0	27,0	23,0	20,0	—	—	—	—	—
	140	40,0	40,0	32,5	32,5	26,0	23,0	—	—	—	—	—
	≥ 160	40,0	40,0	32,5	32,5	26,0	23,0	—	—	—	—	—

- $N_{R,k,II}$: Pull-out resistance of component II
- For t_{N2} made of S320GD or S350GD the values $V_{R,k}$ marked with * can be increased by 8,3%.
- For t_{N1} made of S320GD or S350GD the values $N_{R,k}$ marked with * can be increased by 8,3%.

Fastening screws for sandwich panels

Self-drilling screw JT3-D-(FR-)6H-5,5/6,3xL, JT6-D-(FR-)6H-5,5/6,3xL
with hexagon head or round head with Torx® drive system and sealing washer ≥ Ø22 mm

Annex 6

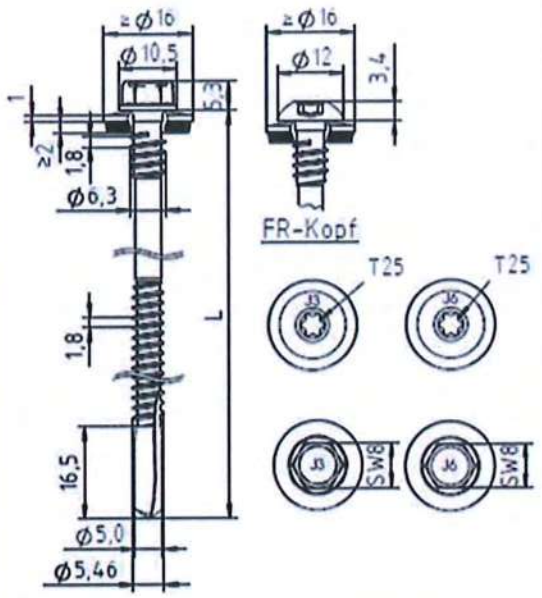

Materials:

Fastener: stainless steel (A2) – EN ISO 3506
stainless steel (A4) – EN ISO 3506

Washer: stainless steel (A2/A4) – EN ISO 3506
with vulcanised EPDM seal

Component I: S280GD to S350GD – EN 10346

Component II: S235 to S355 – EN 10025-1
S280GD to S350GD – EN 10346

Drilling capacity: $\Sigma(t_{N2} + t_{N,II}) \leq 13{,}0$ mm

Timber substructures:

no performance determined

	$t_{N,II}$ [mm]	3,00	4,00	5,00	6,00	8,00	10,0	12,0	—	—	—	—
$V_{R,k}$ [kN] for t_{N2} =	0,40	0,90	0,90	0,90	0,90	0,90	0,90	0,90	—	—	—	—
	0,50	0,90	0,90	0,90	0,90	0,90	0,90	0,90	—	—	—	—
	0,55	0,90	0,90	0,90	0,90	0,90	0,90	0,90	—	—	—	—
	0,60	1,03	1,03	1,03	1,03	1,03	1,03	1,03	—	—	—	—
	0,63	1,10	1,10	1,10	1,10	1,10	1,10	1,10	—	—	—	—
	0,75	1,60	1,60	1,60	1,60	1,60	1,60	1,60	—	—	—	—
	0,88	2,20	2,20	2,20	2,20	2,20	2,20	2,20	—	—	—	—
	1,00	2,90	2,90	2,90	2,90	2,90	2,90	2,90	—	—	—	—
$N_{R,k}$ [kN] for t_{N1} =	0,40	1,54*	1,54*	1,54*	1,54*	1,54*	1,54*	1,54*	—	—	—	—
	0,50	1,60*	1,60*	1,60*	1,60*	1,60*	1,60*	1,60*	—	—	—	—
	0,55	1,90*	1,90*	1,90*	1,90*	1,90*	1,90*	1,90*	—	—	—	—
	0,60	2,09*	2,09*	2,09*	2,09*	2,09*	2,09*	2,09*	—	—	—	—
	0,63	2,20*	2,20*	2,20*	2,20*	2,20*	2,20*	2,20*	—	—	—	—
	0,75	2,80	2,80*	2,80*	2,80*	2,80*	2,80*	2,80*	—	—	—	—
	0,88	3,00	3,50*	3,50*	3,50*	3,50*	3,50*	3,50*	—	—	—	—
	1,00	3,00	4,20*	4,20*	4,20*	4,20*	4,20*	4,20*	—	—	—	—
$N_{R,k,II}$ [kN]		3,00	4,70	6,90	6,90	6,90	6,90	6,90	—	—	—	—
max u [mm] for D_F =	40	14,0	7,0	6,0	5,0	5,0	5,0	5,0	—	—	—	—
	60	18,5	10,0	9,0	8,0	8,0	8,0	8,0	—	—	—	—
	80	22,0	15,0	13,5	12,0	12,0	12,0	12,0	—	—	—	—
	100	26,0	19,0	18,0	15,0	15,0	15,0	15,0	—	—	—	—
	120	29,0	22,5	20,0	18,0	18,0	18,0	18,0	—	—	—	—
	140	33,0	26,0	23,5	21,0	21,0	21,0	21,0	—	—	—	—
	≥ 160	33,0	26,0	23,5	21,0	21,0	21,0	21,0	—	—	—	—

- $N_{R,k,II}$: Pull-out resistance of component II
- For t_{N2} made of S320GD or S350GD the indicated values $V_{R,k}$ can be increased by 8,3%.
- For t_{N1} made of S320GD or S350GD the values $N_{R,k}$ marked with * can be increased by 8,3%.

Fastening screws for sandwich panels

Self-drilling screw JT3-D-(FR-)12H-5,5/6,3xL, JT6-D-(FR-)12H-5,5/6,3xL
with hexagon head or round head with Torx® drive system and sealing washer ≥ Ø16 mm

Annex 7

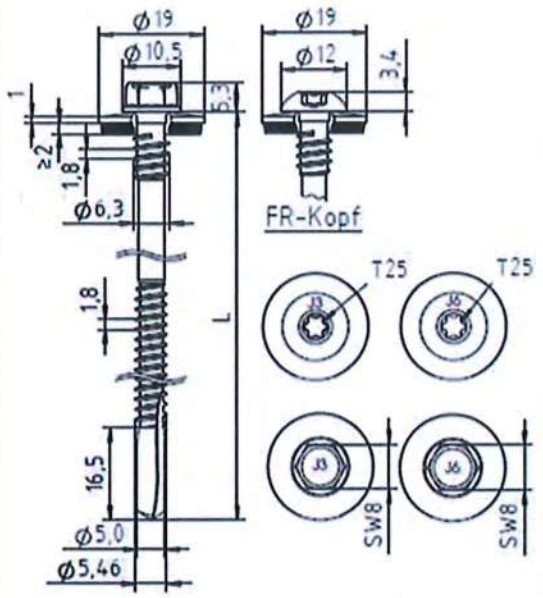

Materials:

Fastener: stainless steel (A2) – EN ISO 3506
stainless steel (A4) – EN ISO 3506

Washer: stainless steel (A2/A4) – EN ISO 3506
with vulcanised EPDM seal

Component I: S280GD to S350GD – EN 10346

Component II: S235 to S355 – EN 10025-1
S280GD to S350GD – EN 10346

Drilling capacity: $\Sigma(t_{N2} + t_{N,II}) \leq 13{,}0$ mm

Timber substructures:

no performance determined

	$t_{N,II}$ [mm]	3,00	4,00	5,00	6,00	8,00	10,0	12,0	—	—	—	—
$V_{R,k}$ [kN] for t_{N2} =	0,40	0,90	0,90	0,90	0,90	0,90	0,90	0,90	—	—	—	—
	0,50	0,90	0,90	0,90	0,90	0,90	0,90	0,90	—	—	—	—
	0,55	0,90	0,90	0,90	0,90	0,90	0,90	0,90	—	—	—	—
	0,60	1,03	1,03	1,03	1,03	1,03	1,03	1,03	—	—	—	—
	0,63	1,10	1,10	1,10	1,10	1,10	1,10	1,10	—	—	—	—
	0,75	1,60	1,60	1,60	1,60	1,60	1,60	1,60	—	—	—	—
	0,88	2,20	2,20	2,20	2,20	2,20	2,20	2,20	—	—	—	—
	1,00	2,90	2,90	2,90	2,90	2,90	2,90	2,90	—	—	—	—
$N_{R,k}$ [kN] for t_{N1} =	0,40	1,83*	1,83*	1,83*	1,83*	1,83*	1,83*	1,83*	—	—	—	—
	0,50	2,02*	2,02*	2,02*	2,02*	2,02*	2,02*	2,02*	—	—	—	—
	0,55	2,45*	2,45*	2,45*	2,45*	2,45*	2,45*	2,45*	—	—	—	—
	0,60	2,89	2,89*	2,89*	2,89*	2,89*	2,89*	2,89*	—	—	—	—
	0,63	3,00	3,15*	3,15*	3,15*	3,15*	3,15*	3,15*	—	—	—	—
	0,75	3,00	3,15*	3,15*	3,15*	3,15*	3,15*	3,15*	—	—	—	—
	0,88	3,00	3,50*	3,50*	3,50*	3,50*	3,50*	3,50*	—	—	—	—
	1,00	3,00	4,20*	4,20*	4,20*	4,20*	4,20*	4,20*	—	—	—	—
$N_{R,k,II}$ [kN]		3,00	4,70	6,90	6,90	6,90	6,90	6,90	—	—	—	—
max u [mm] for D_F =	40	14,0	7,0	6,0	5,0	5,0	5,0	5,0	—	—	—	—
	60	18,5	10,0	9,0	8,0	8,0	8,0	8,0	—	—	—	—
	80	22,0	15,0	13,5	12,0	12,0	12,0	12,0	—	—	—	—
	100	26,0	19,0	18,0	15,0	15,0	15,0	15,0	—	—	—	—
	120	29,0	22,5	20,0	18,0	18,0	18,0	18,0	—	—	—	—
	140	33,0	26,0	23,5	21,0	21,0	21,0	21,0	—	—	—	—
	≥ 160	33,0	26,0	23,5	21,0	21,0	21,0	21,0	—	—	—	—

- $N_{R,k,II}$: Pull-out resistance of component II
- For t_{N2} made of S320GD or S350GD the indicated values $V_{R,k}$ can be increased by 8,3%.
- For t_{N1} made of S320GD or S350GD the values $N_{R,k}$ marked with * can be increased by 8,3%.

Fastening screws for sandwich panels

Self-drilling screw JT3-D-(FR-)12H-5,5/6,3xL, JT6-D-(FR-)12H-5,5/6,3xL
with hexagon head or round head with Torx® drive system and sealing washer Ø19 mm

Annex 8

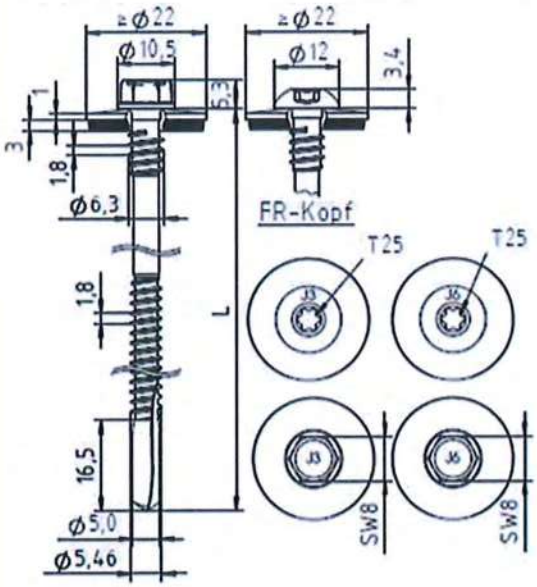

Materials:

Fastener: stainless steel (A2) – EN ISO 3506
stainless steel (A4) – EN ISO 3506

Washer: stainless steel (A2/A4) – EN ISO 3506
with vulcanised EPDM seal

Component I: S280GD to S350GD – EN 10346

Component II: S235 to S355 – EN 10025-1
S280GD to S350GD – EN 10346

Drilling capacity: $\Sigma(t_{N2} + t_{N,II}) \leq 13{,}0$ mm

Timber substructures:

no performance determined

	$t_{N,II}$ [mm]	3,00	4,00	5,00	6,00	8,00	10,0	12,0	—	—	—	—
$V_{R,k}$ [kN] for t_{N2} =	0,40	0,90	0,90	0,90	0,90	0,90	0,90	0,90	—	—	—	—
	0,50	0,90	0,90	0,90	0,90	0,90	0,90	0,90	—	—	—	—
	0,55	0,90	0,90	0,90	0,90	0,90	0,90	0,90	—	—	—	—
	0,60	1,03	1,03	1,03	1,03	1,03	1,03	1,03	—	—	—	—
	0,63	1,10	1,10	1,10	1,10	1,10	1,10	1,10	—	—	—	—
	0,75	1,60	1,60	1,60	1,60	1,60	1,60	1,60	—	—	—	—
	0,88	2,20	2,20	2,20	2,20	2,20	2,20	2,20	—	—	—	—
	1,00	2,90	2,90	2,90	2,90	2,90	2,90	2,90	—	—	—	—
$N_{R,k}$ [kN] for t_{N1} =	0,40	2,12*	2,12*	2,12*	2,12*	2,12*	2,12*	2,12*	—	—	—	—
	0,50	2,28*	2,28*	2,28*	2,28*	2,28*	2,28*	2,28*	—	—	—	—
	0,55	2,71*	2,71*	2,71*	2,71*	2,71*	2,71*	2,71*	—	—	—	—
	0,60	3,00	3,14*	3,14*	3,14*	3,14*	3,14*	3,14*	—	—	—	—
	0,63	3,00	3,40*	3,40*	3,40*	3,40*	3,40*	3,40*	—	—	—	—
	0,75	3,00	3,40*	3,40*	3,40*	3,40*	3,40*	3,40*	—	—	—	—
	0,88	3,00	3,50*	3,50*	3,50*	3,50*	3,50*	3,50*	—	—	—	—
	1,00	3,00	4,20*	4,20*	4,20*	4,20*	4,20*	4,20*	—	—	—	—
$N_{R,k,II}$ [kN]		3,00	4,70	6,90	6,90	6,90	6,90	6,90	—	—	—	—
max u [mm] for D_F =	40	14,0	7,0	6,0	5,0	5,0	5,0	5,0	—	—	—	—
	60	18,5	10,0	9,0	8,0	8,0	8,0	8,0	—	—	—	—
	80	22,0	15,0	13,5	12,0	12,0	12,0	12,0	—	—	—	—
	100	26,0	19,0	18,0	15,0	15,0	15,0	15,0	—	—	—	—
	120	29,0	22,5	20,0	18,0	18,0	18,0	18,0	—	—	—	—
	140	33,0	26,0	23,5	21,0	21,0	21,0	21,0	—	—	—	—
	≥ 160	33,0	26,0	23,5	21,0	21,0	21,0	21,0	—	—	—	—

- $N_{R,k,II}$: Pull-out resistance of component II
- For t_{N2} made of S320GD or S350GD the indicated values $V_{R,k}$ can be increased by 8,3%.
- For t_{N1} made of S320GD or S350GD the values $N_{R,k}$ marked with * can be increased by 8,3%.

Fastening screws for sandwich panels

Self-drilling screw JT3-D-(FR-)12H-5,5/6,3xL, JT6-D-(FR-)12H-5,5/6,3xL
with hexagon head or round head with Torx® drive system and sealing washer ≥ Ø22 mm

Annex 9

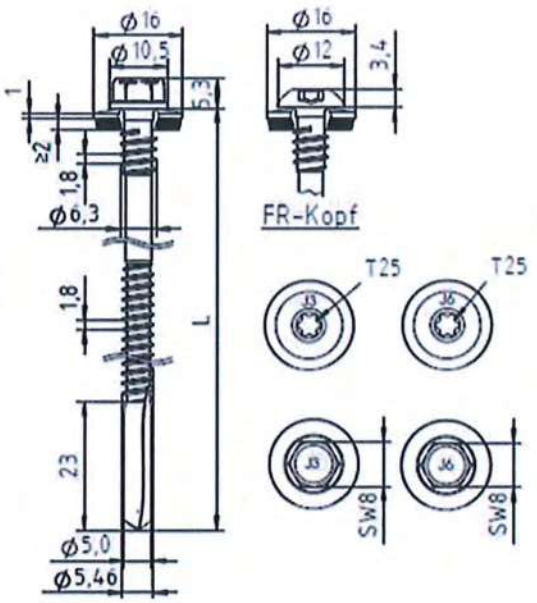

Materials:

Fastener: stainless steel (A2) – EN ISO 3506
stainless steel (A4) – EN ISO 3506

Washer: stainless steel (A2/A4) – EN ISO 3506
with vulcanised EPDM seal

Component I: S280GD to S350GD – EN 10346

Component II: S235 to S355 – EN 10025-1
S280GD to S350GD – EN 10346

Drilling capacity: $\Sigma(t_{N2} + t_{N,II}) \leq 18{,}0$ mm

Timber substructures:

no performance determined

$t_{N,II}$ [mm]		4,00	5,00	6,00	8,00	10,00	12,00	14,00	16,00	—	—	—
$V_{R,k}$ [kN] for t_{N2} =	0,40	0,90	0,90	0,90	0,90	0,90	0,90	0,90	0,90	—	—	—
	0,50	0,90	0,90	0,90	0,90	0,90	0,90	0,90	0,90	—	—	—
	0,55	0,90	0,90	0,90	0,90	0,90	0,90	0,90	0,90	—	—	—
	0,60	1,03	1,03	1,03	1,03	1,03	1,03	1,03	1,03	—	—	—
	0,63	1,10	1,10	1,10	1,10	1,10	1,10	1,10	1,10	—	—	—
	0,75	1,60	1,60	1,60	1,60	1,60	1,60	1,60	1,60	—	—	—
	0,88	2,20	2,20	2,20	2,20	2,20	2,20	2,20	2,20	—	—	—
	1,00	2,90	2,90	2,90	2,90	2,90	2,90	2,90	2,90	—	—	—
$N_{R,k}$ [kN] for t_{N1} =	0,40	1,54	1,54	1,54	1,54	1,54	1,54	1,54	1,54	—	—	—
	0,50	1,60	1,60	1,60	1,60	1,60	1,60	1,60	1,60	—	—	—
	0,55	1,90	1,90	1,90	1,90	1,90	1,90	1,90	1,90	—	—	—
	0,60	2,09	2,09	2,09	2,09	2,09	2,09	2,09	2,09	—	—	—
	0,63	2,20	2,20	2,20	2,20	2,20	2,20	2,20	2,20	—	—	—
	0,75	2,80	2,80	2,80	2,80	2,80	2,80	2,80	2,80	—	—	—
	0,88	3,50	3,50	3,50	3,50	3,50	3,50	3,50	3,50	—	—	—
	1,00	4,20	4,20	4,20	4,20	4,20	4,20	4,20	4,20	—	—	—
$N_{R,k,II}$ [kN]		4,70	6,90	6,90	6,90	6,90	6,90	6,90	6,90	—	—	—
max u [mm] for D_F =	40	7,0	6,0	5,0	5,0	5,0	5,0	5,0	5,0	—	—	—
	60	10,0	9,0	8,0	8,0	8,0	8,0	8,0	8,0	—	—	—
	80	15,0	13,5	12,0	12,0	12,0	12,0	12,0	12,0	—	—	—
	100	19,0	18,0	15,0	15,0	15,0	15,0	15,0	15,0	—	—	—
	120	22,5	20,0	18,0	18,0	18,0	18,0	18,0	18,0	—	—	—
	140	26,0	23,5	21,0	21,0	21,0	21,0	21,0	21,0	—	—	—
	≥ 160	26,0	23,5	21,0	21,0	21,0	21,0	21,0	21,0	—	—	—

- $N_{R,k,II}$: Pull-out resistance of component II
- For t_{N2} made of S320GD or S350GD the indicated values $V_{R,k}$ can be increased by 8,3%.
- For t_{N1} made of S320GD or S350GD the values $N_{R,k}$ can be increased by 8,3%.

Fastening screws for sandwich panels

Self-drilling screw JT3-D-(FR-)18H-5,5/6,3xL, JT6-D-(FR-)18H-5,5/6,3xL
with hexagon head or round head with Torx® drive system and sealing washer Ø16 mm

Annex 10

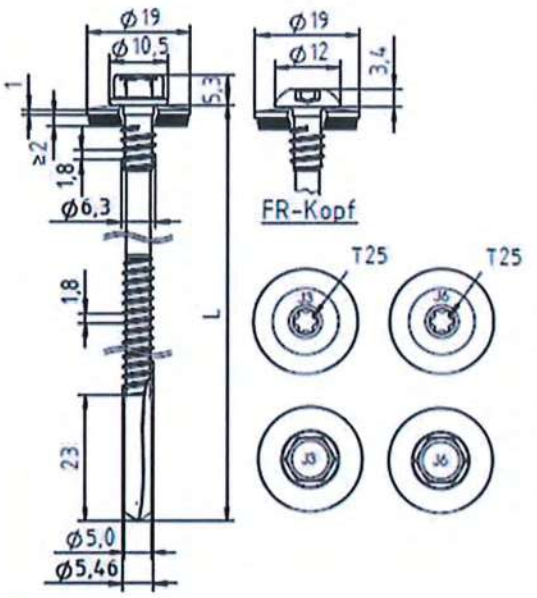

Materials:

Fastener: stainless steel (A2) – EN ISO 3506
stainless steel (A4) – EN ISO 3506

Washer: stainless steel (A2/A4) – EN ISO 3506
with vulcanised EPDM seal

Component I: S280GD to S350GD – EN 10346

Component II: S235 to S355 – EN 10025-1
S280GD to S350GD – EN 10346

Drilling capacity: $\Sigma(t_{N2} + t_{N,II}) \leq 18{,}0$ mm

Timber substructures:

no performance determined

$t_{N,II}$ [mm]		4,00	5,00	6,00	8,00	10,00	12,00	14,00	16,00	—	—	—
$V_{R,k}$ [kN] for t_{N2} =	0,40	0,90	0,90	0,90	0,90	0,90	0,90	0,90	0,90	—	—	—
	0,50	0,90	0,90	0,90	0,90	0,90	0,90	0,90	0,90	—	—	—
	0,55	0,90	0,90	0,90	0,90	0,90	0,90	0,90	0,90	—	—	—
	0,60	1,03	1,03	1,03	1,03	1,03	1,03	1,03	1,03	—	—	—
	0,63	1,10	1,10	1,10	1,10	1,10	1,10	1,10	1,10	—	—	—
	0,75	1,60	1,60	1,60	1,60	1,60	1,60	1,60	1,60	—	—	—
	0,88	2,20	2,20	2,20	2,20	2,20	2,20	2,20	2,20	—	—	—
	1,00	2,90	2,90	2,90	2,90	2,90	2,90	2,90	2,90	—	—	—
$N_{R,k}$ [kN] for t_{N1} =	0,40	1,83	1,83	1,83	1,83	1,83	1,83	1,83	1,83	—	—	—
	0,50	2,02	2,02	2,02	2,02	2,02	2,02	2,02	2,02	—	—	—
	0,55	2,45	2,45	2,45	2,45	2,45	2,45	2,45	2,45	—	—	—
	0,60	2,89	2,89	2,89	2,89	2,89	2,89	2,89	2,89	—	—	—
	0,63	3,15	3,15	3,15	3,15	3,15	3,15	3,15	3,15	—	—	—
	0,75	3,15	3,15	3,15	3,15	3,15	3,15	3,15	3,15	—	—	—
	0,88	3,50	3,50	3,50	3,50	3,50	3,50	3,50	3,50	—	—	—
	1,00	4,20	4,20	4,20	4,20	4,20	4,20	4,20	4,20	—	—	—
$N_{R,k,II}$ [kN]		4,70	6,90	6,90	6,90	6,90	6,90	6,90	6,90	—	—	—
max u [mm] for D_F =	40	7,0	6,0	5,0	5,0	5,0	5,0	5,0	5,0	—	—	—
	60	10,0	9,0	8,0	8,0	8,0	8,0	8,0	8,0	—	—	—
	80	15,0	13,5	12,0	12,0	12,0	12,0	12,0	12,0	—	—	—
	100	19,0	18,0	15,0	15,0	15,0	15,0	15,0	15,0	—	—	—
	120	22,5	20,0	18,0	18,0	18,0	18,0	18,0	18,0	—	—	—
	140	26,0	23,5	21,0	21,0	21,0	21,0	21,0	21,0	—	—	—
	≥ 160	26,0	23,5	21,0	21,0	21,0	21,0	21,0	21,0	—	—	—

- $N_{R,k,II}$: Pull-out resistance of component II
- For t_{N2} made of S320GD or S350GD the indicated values $V_{R,k}$ can be increased by 8,3%.
- For t_{N1} made of S320GD or S350GD the indicated values $N_{R,k}$ can be increased by 8,3%.

Fastening screws for sandwich panels

Self-drilling screw JT3-D-(FR-)18H-5,5/6,3xL, JT6-D-(FR-)18H-5,5/6,3xL
with hexagon head or round head with Torx® drive system and sealing washer Ø19 mm

Annex 11

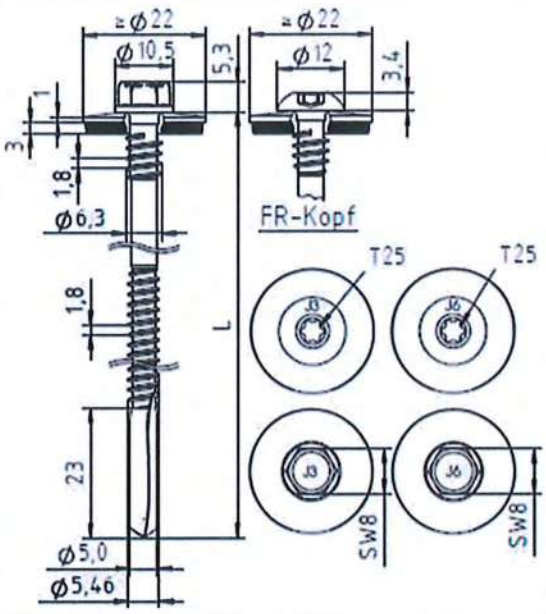

Material:

Fastener: stainless steel (A2) – EN ISO 3506
stainless steel (A4) – EN ISO 3506

Washer: stainless steel (A2/A4) – EN ISO 3506
with vulcanised EPDM seal

Component I: S280GD to S350GD – EN 10346

Component II: S235 to S355 – EN 10025-1
S280GD to S350GD – EN 10346

Drilling capacity: $\Sigma(t_{N2} + t_{N,II}) \leq 18{,}0$ mm

Timber substructures:

no performance determined

$t_{N,II}$ [mm]		4,00	5,00	6,00	8,00	10,00	12,00	14,00	16,00	—	—	—
$V_{R,k}$ [kN] for t_{N2} =	0,40	0,90	0,90	0,90	0,90	0,90	0,90	0,90	0,90	—	—	—
	0,50	0,90	0,90	0,90	0,90	0,90	0,90	0,90	0,90	—	—	—
	0,55	0,90	0,90	0,90	0,90	0,90	0,90	0,90	0,90	—	—	—
	0,60	1,03	1,03	1,03	1,03	1,03	1,03	1,03	1,03	—	—	—
	0,63	1,10	1,10	1,10	1,10	1,10	1,10	1,10	1,10	—	—	—
	0,75	1,60	1,60	1,60	1,60	1,60	1,60	1,60	1,60	—	—	—
	0,88	2,20	2,20	2,20	2,20	2,20	2,20	2,20	2,20	—	—	—
	1,00	2,90	2,90	2,90	2,90	2,90	2,90	2,90	2,90	—	—	—
$N_{R,k}$ [kN] for t_{N1} =	0,40	2,12	2,12	2,12	2,12	2,12	2,12	2,12	2,12	—	—	—
	0,50	2,28	2,28	2,28	2,28	2,28	2,28	2,28	2,28	—	—	—
	0,55	2,71	2,71	2,71	2,71	2,71	2,71	2,71	2,71	—	—	—
	0,60	3,14	3,14	3,14	3,14	3,14	3,14	3,14	3,14	—	—	—
	0,63	3,40	3,40	3,40	3,40	3,40	3,40	3,40	3,40	—	—	—
	0,75	3,40	3,40	3,40	3,40	3,40	3,40	3,40	3,40	—	—	—
	0,88	3,50	3,50	3,50	3,50	3,50	3,50	3,50	3,50	—	—	—
	1,00	4,20	4,20	4,20	4,20	4,20	4,20	4,20	4,20	—	—	—
$N_{R,k,II}$ [kN]		4,70	6,90	6,90	6,90	6,90	6,90	6,90	6,90	—	—	—
max u [mm] for D_F =	40	7,0	6,0	5,0	5,0	5,0	5,0	5,0	5,0	—	—	—
	60	10,0	9,0	8,0	8,0	8,0	8,0	8,0	8,0	—	—	—
	80	15,0	13,5	12,0	12,0	12,0	12,0	12,0	12,0	—	—	—
	100	19,0	18,0	15,0	15,0	15,0	15,0	15,0	15,0	—	—	—
	120	22,5	20,0	18,0	18,0	18,0	18,0	18,0	18,0	—	—	—
	140	26,0	23,5	21,0	21,0	21,0	21,0	21,0	21,0	—	—	—
	≥ 160	26,0	23,5	21,0	21,0	21,0	21,0	21,0	21,0	—	—	—

- $N_{R,k,II}$: Pull-out resistance of component II
- For t_{N2} made of S320GD or S350GD the indicated values $V_{R,k}$ can be increased by 8,3%.
- For t_{N1} made of S320GD or S350GD the indicated values $N_{R,k}$ can be increased by 8,3%.

Fastening screws for sandwich panels

Self-drilling screw JT3-D-(FR-)18H-5,5/6,3xL, JT6-D-(FR-)18H-5,5/6,3xL
with hexagon head or round head with Torx® drive system and sealing washer ≥ Ø22 mm

Annex 12

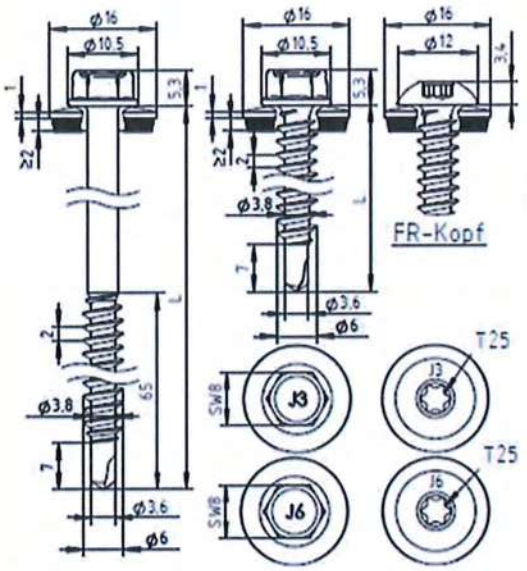

Material:

Fastener: stainless steel (A2) – EN ISO 3506
stainless steel (A4) – EN ISO 3506

Washer: stainless steel (A2/A4) – EN ISO 3506
with vulcanised EPDM seal

Component I: S280GD to S350GD – EN 10346

Component II: S280GD to S350GD – EN 10346

Drilling capacity: $\Sigma(t_{N2} + t_{N,II}) \leq 2{,}00$ mm

Timber substructures:

no performance determined

	$t_{N,II}$ [mm]	0,63	0,75	0,88	1,00	—	—	—	—	—	—	—
$V_{R,k}$ [kN] for t_{N2} =	0,40	0,38	0,38	0,38	0,38	—	—	—	—	—	—	—
	0,50	0,52	0,84	0,95	1,05	—	—	—	—	—	—	—
	0,55	0,58	0,85	0,97	1,07	—	—	—	—	—	—	—
	0,60	0,65	0,87	0,99	1,10	—	—	—	—	—	—	—
	0,63	0,68	0,88	1,00	1,11	—	—	—	—	—	—	—
	0,75	0,79	0,91	1,04	1,17	—	—	—	—	—	—	—
	0,88	0,79	0,96	1,10	1,23	—	—	—	—	—	—	—
	1,00	0,79	1,02	1,16	1,30	—	—	—	—	—	—	—
$N_{R,k}$ [kN] for t_{N1} =	0,40	0,80	1,05	1,35	1,38	—	—	—	—	—	—	—
	0,50	0,80	1,05	1,35	1,63	—	—	—	—	—	—	—
	0,55	0,80	1,05	1,35	1,63	—	—	—	—	—	—	—
	0,60	0,80	1,05	1,35	1,63	—	—	—	—	—	—	—
	0,63	0,80	1,05	1,35	1,63	—	—	—	—	—	—	—
	0,75	0,80	1,05	1,35	1,63	—	—	—	—	—	—	—
	0,88	0,80	1,05	1,35	1,63	—	—	—	—	—	—	—
	1,00	0,80	1,05	1,35	1,63	—	—	—	—	—	—	—
$N_{R,k,II}$ [kN]		0,80	1,05	1,35	1,63	—	—	—	—	—	—	—
max u [mm] for D_F =	40	8,0	8,0	6,8	6,0	—	—	—	—	—	—	—
	60	12,0	12,0	10,2	9,0	—	—	—	—	—	—	—
	80	16,0	16,0	13,6	12,0	—	—	—	—	—	—	—
	100	20,0	20,0	17,0	15,0	—	—	—	—	—	—	—
	120	24,0	24,0	20,5	18,0	—	—	—	—	—	—	—
	140	28,0	28,0	23,9	21,0	—	—	—	—	—	—	—
	≥ 160	32,0	32,0	27,3	24,0	—	—	—	—	—	—	—

- $N_{R,k,II}$: Pull-out resistance of component II
- For t_{N2} made of S320GD or S350GD the values $V_{R,k}$ marked with * can be increased by 8,3%.
- The values may also be used for double-layer component II.

Fastening screws for sandwich panels

Self-drilling screw JT3-(FR-)2-6,0xL, JT6-(FR-)2-6,0xL
with hexagon head or round head with Torx® drive system and sealing washer Ø16 mm

Annex 13

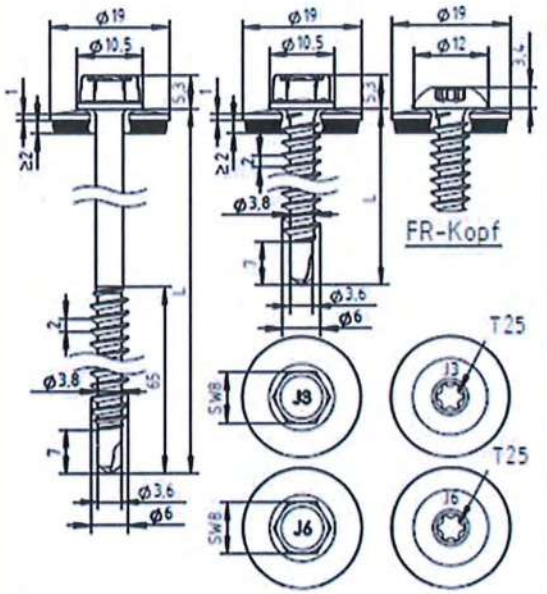

Material:

Fastener: stainless steel (A2) – EN ISO 3506
stainless steel (A4) – EN ISO 3506

Washer: stainless steel (A2/A4) – EN ISO 3506
with vulcanised EPDM seal

Component I: S280GD to S350GD – EN 10346

Component II: S280GD to S350GD – EN 10346

Drilling capacity: $\Sigma(t_{N2} + t_{N,II}) \leq 2{,}00$ mm

Timber substructures:

no performance determined

	$t_{N,II}$ [mm]	0,63	0,75	0,88	1,00	—	—	—	—	—	—	—
$V_{R,k}$ [kN] für t_{N2} =	0,40	0,38	0,38	0,38	0,38	—	—	—	—	—	—	—
	0,50	0,52	0,84	0,95	1,05	—	—	—	—	—	—	—
	0,55	0,58	0,85	0,97	1,07	—	—	—	—	—	—	—
	0,60	0,65	0,87	0,99	1,10	—	—	—	—	—	—	—
	0,63	0,68	0,88	1,00	1,11	—	—	—	—	—	—	—
	0,75	0,79	0,91	1,04	1,17	—	—	—	—	—	—	—
	0,88	0,79	0,96	1,10	1,23	—	—	—	—	—	—	—
	1,00	0,79	1,02	1,16	1,30	—	—	—	—	—	—	—
$N_{R,k}$ [kN] für t_{N1} =	0,40	0,80	1,05	1,35	1,63	—	—	—	—	—	—	—
	0,50	0,80	1,05	1,35	1,63	—	—	—	—	—	—	—
	0,55	0,80	1,05	1,35	1,63	—	—	—	—	—	—	—
	0,60	0,80	1,05	1,35	1,63	—	—	—	—	—	—	—
	0,63	0,80	1,05	1,35	1,63	—	—	—	—	—	—	—
	0,75	0,80	1,05	1,35	1,63	—	—	—	—	—	—	—
	0,88	0,80	1,05	1,35	1,63	—	—	—	—	—	—	—
	1,00	0,80	1,05	1,35	1,63	—	—	—	—	—	—	—
$N_{R,k,II}$ [kN]		0,80	1,05	1,35	1,63	—	—	—	—	—	—	—
max u [mm] für D_F =	40	8,0	8,0	6,8	6,0	—	—	—	—	—	—	—
	60	12,0	12,0	10,2	9,0	—	—	—	—	—	—	—
	80	16,0	16,0	13,6	12,0	—	—	—	—	—	—	—
	100	20,0	20,0	17,0	15,0	—	—	—	—	—	—	—
	120	24,0	24,0	20,5	18,0	—	—	—	—	—	—	—
	140	28,0	28,0	23,9	21,0	—	—	—	—	—	—	—
	≥ 160	32,0	32,0	27,3	24,0	—	—	—	—	—	—	—

- $N_{R,k,II}$: Pull-out resistance of component II
- For t_{N2} made of S320GD or S350GD the values $V_{R,k}$ marked with * can be increased by 8,3%.
- The values may also be used for double-layer component II.

Fastening screws for sandwich panels

Self-drilling screw JT3-(FR-)2-6,0xL, JT6-(FR-)2-6,0xL
with hexagon head or round head with Torx® drive system and sealing washer Ø19 mm

Annex 14

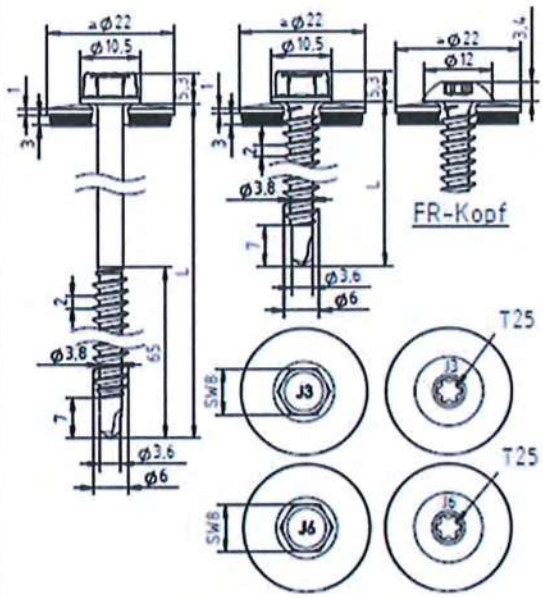

Material:

Fastener: stainless steel (A2) – EN ISO 3506
stainless steel (A4) – EN ISO 3506

Washer: stainless steel (A2/A4) – EN ISO 3506
with vulcanised EPDM seal

Component I: S280GD to S350GD – EN 10346

Component II: S280GD to S350GD – EN 10346

Drilling capacity: $\Sigma(t_{N2} + t_{N,II}) \leq 2{,}00$ mm

Timber substructures:

no performance determined

	$t_{N,II}$ [mm]	0,63	0,75	0,88	1,00	—	—	—	—	—	—	—
$V_{R,k}$ [kN] für t_{N2} =	0,40	0,38	0,38	0,38	0,38	—	—	—	—	—	—	—
	0,50	0,52	0,84	0,95	1,05	—	—	—	—	—	—	—
	0,55	0,58	0,85	0,97	1,07	—	—	—	—	—	—	—
	0,60	0,65	0,87	0,99	1,10	—	—	—	—	—	—	—
	0,63	0,68	0,88	1,00	1,11	—	—	—	—	—	—	—
	0,75	0,79	0,91	1,04	1,17	—	—	—	—	—	—	—
	0,88	0,79	0,96	1,10	1,23	—	—	—	—	—	—	—
	1,00	0,79	1,02	1,16	1,30	—	—	—	—	—	—	—
$N_{R,k}$ [kN] für t_{N1} =	0,40	0,80	1,05	1,35	1,63	—	—	—	—	—	—	—
	0,50	0,80	1,05	1,35	1,63	—	—	—	—	—	—	—
	0,55	0,80	1,05	1,35	1,63	—	—	—	—	—	—	—
	0,60	0,80	1,05	1,35	1,63	—	—	—	—	—	—	—
	0,63	0,80	1,05	1,35	1,63	—	—	—	—	—	—	—
	0,75	0,80	1,05	1,35	1,63	—	—	—	—	—	—	—
	0,88	0,80	1,05	1,35	1,63	—	—	—	—	—	—	—
	1,00	0,80	1,05	1,35	1,63	—	—	—	—	—	—	—
$N_{R,k,II}$ [kN]		0,80	1,05	1,35	1,63	—	—	—	—	—	—	—
max u [mm] für D_F =	40	8,0	8,0	6,8	6,0	—	—	—	—	—	—	—
	60	12,0	12,0	10,2	9,0	—	—	—	—	—	—	—
	80	16,0	16,0	13,6	12,0	—	—	—	—	—	—	—
	100	20,0	20,0	17,0	15,0	—	—	—	—	—	—	—
	120	24,0	24,0	20,5	18,0	—	—	—	—	—	—	—
	140	28,0	28,0	23,9	21,0	—	—	—	—	—	—	—
	≥ 160	32,0	32,0	27,3	24,0	—	—	—	—	—	—	—

- $N_{R,k,II}$: Pull-out resistance of component II
- For t_{N2} made of S320GD or S350GD the values $V_{R,k}$ marked with * can be increased by 8,3%.
- The values may also be used for double-layer component II.

Fastening screws for sandwich panels

Self-drilling screw JT3-(FR-)2-6,0xL, JT6-(FR-)2-6,0xL
with hexagon head or round head with Torx® drive system and sealing washer Ø22 mm

Annex 15

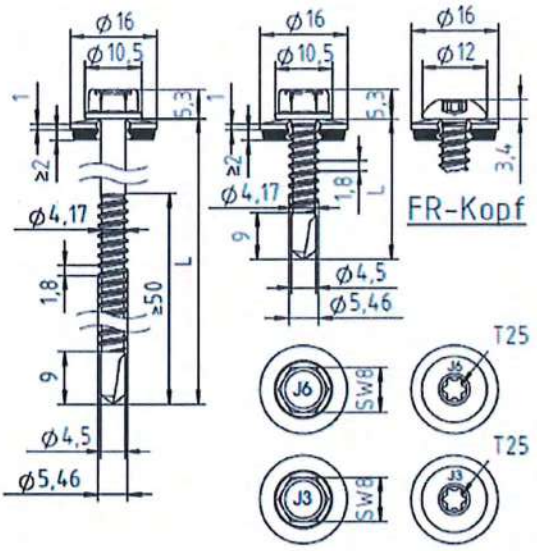

Materials:

Fastener: stainless steel (A2) – EN ISO 3506
stainless steel (A4) – EN ISO 3506

Washer: stainless steel (A2/A4) – EN ISO 3506
with vulcanised EPDM seal

Component I: S280GD to S350GD – EN 10346

Component II: S235 to S355 – EN 10025-1
S280GD to S450GD – EN 10346
HX300LAD to HX460LAD – EN 10346

Drilling capacity: $\Sigma(t_{N2} + t_{N,II}) \leq 6{,}50$ mm

Timber substructures:

no performance determined

	$t_{N,II}$ [mm]	1,50	2,00	2,50	3,00	4,00	5,00	—	—	—	—	—
$V_{R,k}$ [kN] for t_{N2} =	0,40	0,60*	0,60*	0,60*	0,60*	0,60*	0,60*	—	—	—	—	—
	0,50	1,50*	1,50*	1,50*	1,50*	1,50*	1,50*	—	—	—	—	—
	0,55	1,50*	1,50*	1,50*	1,50*	1,50*	1,50*	—	—	—	—	—
	0,60	1,56*	1,56*	1,56*	1,56*	1,56*	1,56*	—	—	—	—	—
	0,63	1,60*	1,60*	1,60*	1,60*	1,60*	1,60*	—	—	—	—	—
	0,75	2,70	2,70	2,70	2,70	2,70	2,70	—	—	—	—	—
	0,88	2,70	2,70	2,70	2,70	2,70	2,70	—	—	—	—	—
	1,00	2,70	2,70	2,70	2,70	2,70	2,70	—	—	—	—	—
$N_{R,k}$ [kN] for t_{N1} =	0,40	1,57*	1,57*	1,57*	1,57*	1,57*	1,57*	—	—	—	—	—
	0,50	1,70*	1,70*	1,70*	1,70*	1,70*	1,70*	—	—	—	—	—
	0,55	1,90	2,00*	2,00*	2,00*	2,00*	2,00*	—	—	—	—	—
	0,60	1,90	2,13*	2,13*	2,13*	2,13*	2,13*	—	—	—	—	—
	0,63	1,90	2,20	2,20*	2,20*	2,20*	2,20*	—	—	—	—	—
	0,75	1,90	2,60	3,40*	3,40*	3,40*	3,40*	—	—	—	—	—
	0,88	1,90	2,60	4,10	4,10*	4,10*	4,10*	—	—	—	—	—
	1,00	1,90	2,60	4,20	4,90	4,90	4,90	—	—	—	—	—
$N_{R,k,II}$ [kN]		1,90	2,60	4,20	4,90	4,90	4,90	—	—	—	—	—
max u [mm] for D_F =	40	20,0	15,5	7,0	7,0	7,0	6,0	—	—	—	—	—
	60	26,0	21,5	11,0	11,0	10,0	8,0	—	—	—	—	—
	80	31,5	27,0	16,0	16,0	15,0	13,0	—	—	—	—	—
	100	37,5	33,0	21,5	21,5	19,0	16,0	—	—	—	—	—
	120	40,0	38,5	27,0	27,0	23,0	20,0	—	—	—	—	—
	140	40,0	40,0	32,5	32,5	26,0	23,0	—	—	—	—	—
	≥ 160	40,0	40,0	32,5	32,5	26,0	23,0	—	—	—	—	—

- $N_{R,k,II}$: Pull-out resistance of component II
- For t_{N2} made of S320GD or S350GD the values $V_{R,k}$ marked with * can be increased by 8,3%.
- For t_{N1} made of S320GD or S350GD the values $N_{R,k}$ marked with * can be increased by 8,3%.

Fastening screws for sandwich panels

Self-drilling screw JT3-(FR-)6-5,5xL, JT6-(FR-)6-5,5xL
with hexagon head or round head with Torx® drive system and sealing washer Ø16 mm

Annex 16

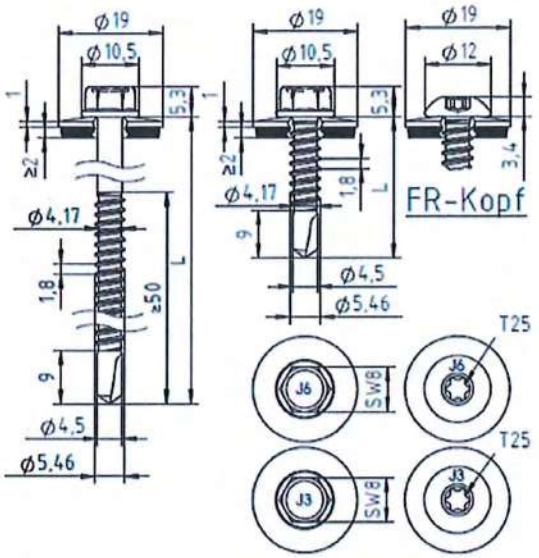

Materials:

Fastener: stainless steel (A2) – EN ISO 3506
stainless steel (A4) – EN ISO 3506

Washer: stainless steel (A2/A4) – EN ISO 3506
with vulcanised EPDM seal

Component I: S280GD to S350GD – EN 10346

Component II: S235 to S355 – EN 10025-1
S280GD to S450GD – EN 10346
HX300LAD to HX460LAD – EN 10346

Drilling capacity: $\Sigma(t_{N2} + t_{N,II}) \leq 6{,}50$ mm

Timber substructures:

no performance determined

	$t_{N,II}$ [mm]	1,50	2,00	2,50	3,00	4,00	5,00	—	—	—	—	—
$V_{R,k}$ [kN] for t_{N2} =	0,40	0,60*	0,60*	0,60*	0,60*	0,60*	0,60*	—	—	—	—	—
	0,50	1,50*	1,50*	1,50*	1,50*	1,50*	1,50*	—	—	—	—	—
	0,55	1,50*	1,50*	1,50*	1,50*	1,50*	1,50*	—	—	—	—	—
	0,60	1,56*	1,56*	1,56*	1,56*	1,56*	1,56*	—	—	—	—	—
	0,63	1,60*	1,60*	1,60*	1,60*	1,60*	1,60*	—	—	—	—	—
	0,75	2,70	2,70	2,70	2,70	2,70	2,70	—	—	—	—	—
	0,88	2,70	2,70	2,70	2,70	2,70	2,70	—	—	—	—	—
	1,00	2,70	2,70	2,70	2,70	2,70	2,70	—	—	—	—	—
$N_{R,k}$ [kN] for t_{N1} =	0,40	1,86	1,86*	1,86*	1,86*	1,86*	1,86*	—	—	—	—	—
	0,50	1,86	1,86*	1,86*	1,86*	1,86*	1,86*	—	—	—	—	—
	0,55	1,90	2,15*	2,15*	2,15*	2,15*	2,15*	—	—	—	—	—
	0,60	1,90	2,44	2,44*	2,44*	2,44*	2,44*	—	—	—	—	—
	0,63	1,90	2,60	2,61*	2,61*	2,61*	2,61*	—	—	—	—	—
	0,75	1,90	2,60	3,40*	3,40*	3,40*	3,40*	—	—	—	—	—
	0,88	1,90	2,60	4,10	4,10*	4,10*	4,10*	—	—	—	—	—
	1,00	1,90	2,60	4,20	4,90	4,90	4,90	—	—	—	—	—
$N_{R,k,II}$ [kN]		1,90	2,60	4,20	4,90	4,90	4,90	—	—	—	—	—
max u [mm] for D_F =	40	20,0	15,5	7,0	7,0	7,0	6,0	—	—	—	—	—
	60	26,0	21,5	11,0	11,0	10,0	8,0	—	—	—	—	—
	80	31,5	27,0	16,0	16,0	15,0	13,0	—	—	—	—	—
	100	37,5	33,0	21,5	21,5	19,0	16,0	—	—	—	—	—
	120	40,0	38,5	27,0	27,0	23,0	20,0	—	—	—	—	—
	140	40,0	40,0	32,5	32,5	26,0	23,0	—	—	—	—	—
	≥ 160	40,0	40,0	32,5	32,5	26,0	23,0	—	—	—	—	—

- $N_{R,k,II}$: Pull-out resistance of component II
- For t_{N2} made of S320GD or S350GD the values $V_{R,k}$ marked with * can be increased by 8,3%.
- For t_{N1} made of S320GD or S350GD the values $N_{R,k}$ marked with * can be increased by 8,3%.

Fastening screws for sandwich panels

Self-drilling screw JT3-(FR-)6-5,5xL, JT6-(FR-)6-5,5xL
with hexagon head or round head with Torx® drive system and sealing washer Ø19 mm

Annex 17

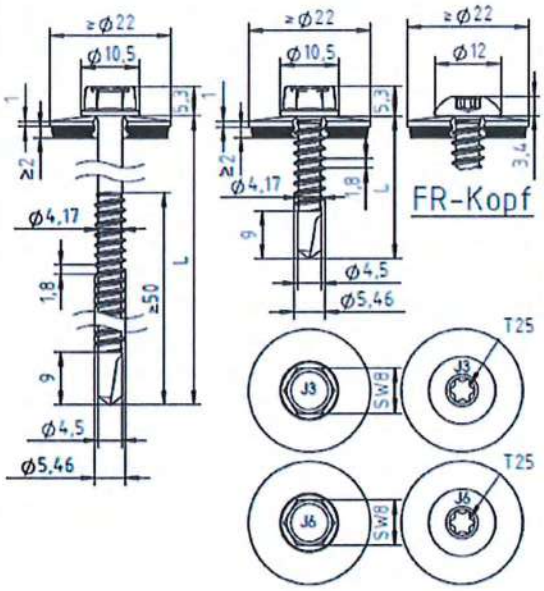

Materials:

Fastener: stainless steel (A2) – EN ISO 3506
stainless steel (A4) – EN ISO 3506

Washer: stainless steel (A2/A4) – EN ISO 3506
with vulcanised EPDM seal

Component I: S280GD to S350GD – EN 10346

Component II: S235 to S355 – EN 10025-1
S280GD to S450GD – EN 10346
HX300LAD to HX460LAD – EN 10346

Drilling capacity: $\Sigma(t_{N2} + t_{N,II}) \leq 6{,}50$ mm

Timber substructures:

no performance determined

	$t_{N,II}$ [mm]	1,50	2,00	2,50	3,00	4,00	5,00	—	—	—	—	—
$V_{R,k}$ [kN] for t_{N2} =	0,40	0,60*	0,60*	0,60*	0,60*	0,60*	0,60*	—	—	—	—	—
	0,50	1,50*	1,50*	1,50*	1,50*	1,50*	1,50*	—	—	—	—	—
	0,55	1,50*	1,50*	1,50*	1,50*	1,50*	1,50*	—	—	—	—	—
	0,60	1,56*	1,56*	1,56*	1,56*	1,56*	1,56*	—	—	—	—	—
	0,63	1,60*	1,60*	1,60*	1,60*	1,60*	1,60*	—	—	—	—	—
	0,75	2,70	2,70	2,70	2,70	2,70	2,70	—	—	—	—	—
	0,88	2,70	2,70	2,70	2,70	2,70	2,70	—	—	—	—	—
	1,00	2,70	2,70	2,70	2,70	2,70	2,70	—	—	—	—	—
$N_{R,k}$ [kN] for t_{N1} =	0,40	1,90	2,16*	2,16*	2,16*	2,16*	2,16*	—	—	—	—	—
	0,50	1,90	2,16*	2,16*	2,16*	2,16*	2,16*	—	—	—	—	—
	0,55	1,90	2,40*	2,40*	2,40*	2,40*	2,40*	—	—	—	—	—
	0,60	1,90	2,60	2,64*	2,64*	2,64*	2,64*	—	—	—	—	—
	0,63	1,90	2,60	2,78*	2,78*	2,78*	2,78*	—	—	—	—	—
	0,75	1,90	2,60	3,40*	3,40*	3,40*	3,40*	—	—	—	—	—
	0,88	1,90	2,60	4,10	4,10*	4,10*	4,10*	—	—	—	—	—
	1,00	1,90	2,60	4,20	4,90	4,90	4,90	—	—	—	—	—
$N_{R,k,II}$ [kN]		1,90	2,60	4,20	4,90	4,90	4,90	—	—	—	—	—
max u [mm] for D_F =	40	20,0	15,5	7,0	7,0	7,0	6,0	—	—	—	—	—
	60	26,0	21,5	11,0	11,0	10,0	8,0	—	—	—	—	—
	80	31,5	27,0	16,0	16,0	15,0	13,0	—	—	—	—	—
	100	37,5	33,0	21,5	21,5	19,0	16,0	—	—	—	—	—
	120	40,0	38,5	27,0	27,0	23,0	20,0	—	—	—	—	—
	140	40,0	40,0	32,5	32,5	26,0	23,0	—	—	—	—	—
	≥ 160	40,0	40,0	32,5	32,5	26,0	23,0	—	—	—	—	—

- $N_{R,k,II}$: Pull-out resistance of component II
- For t_{N2} made of S320GD or S350GD the values $V_{R,k}$ marked with * can be increased by 8,3%.
- For t_{N1} made of S320GD or S350GD the values $N_{R,k}$ marked with * can be increased by 8,3%.

Fastening screws for sandwich panels

Self-drilling screw JT3-(FR-)6-5,5xL, JT6-(FR-)6-5,5xL
with hexagon head or round head with Torx® drive system and sealing washer ≥ Ø22 mm

Annex 18

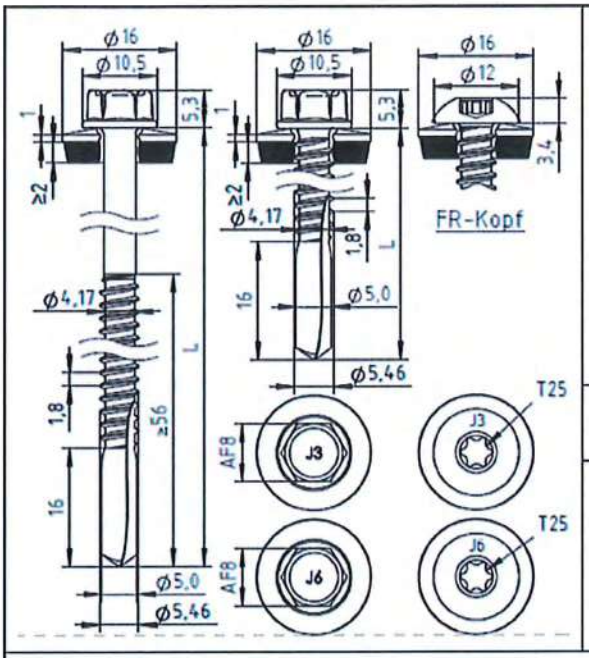

Materials:

Fastener: stainless steel (A2) – EN ISO 3506
stainless steel (A4) – EN ISO 3506

Washer: stainless steel (A2/A4) – EN ISO 3506
with vulcanised EPDM seal

Component I: S280GD to S350GD – EN 10346

Component II: S235 to S355 – EN 10025-1
S280GD to S350GD – EN 10346

Drilling capacity: $\Sigma(t_{N2} + t_{N,II}) \leq 13{,}0$ mm

Timber substructures:

no performance determined

$t_{N,II}$ [mm]		3,00	4,00	5,00	6,00	8,00	10,0	12,0	—	—	—	—
$V_{R,k}$ [kN] for t_{N2} =	0,40	0,90	0,90	0,90	0,90	0,90	0,90	0,90	—	—	—	—
	0,50	0,90	0,90	0,90	0,90	0,90	0,90	0,90	—	—	—	—
	0,55	0,90	0,90	0,90	0,90	0,90	0,90	0,90	—	—	—	—
	0,60	1,03	1,03	1,03	1,03	1,03	1,03	1,03	—	—	—	—
	0,63	1,10	1,10	1,10	1,10	1,10	1,10	1,10	—	—	—	—
	0,75	1,60	1,60	1,60	1,60	1,60	1,60	1,60	—	—	—	—
	0,88	2,20	2,20	2,20	2,20	2,20	2,20	2,20	—	—	—	—
	1,00	2,90	2,90	2,90	2,90	2,90	2,90	2,90	—	—	—	—
$N_{R,k}$ [kN] for t_{N1} =	0,40	1,54*	1,54*	1,54*	1,54*	1,54*	1,54*	1,54*	—	—	—	—
	0,50	1,70*	1,70*	1,70*	1,70*	1,70*	1,70*	1,70*	—	—	—	—
	0,55	2,00*	2,00*	2,00*	2,00*	2,00*	2,00*	2,00*	—	—	—	—
	0,60	2,25*	2,25*	2,25*	2,25*	2,25*	2,25*	2,25*	—	—	—	—
	0,63	2,40*	2,40*	2,40*	2,40*	2,40*	2,40*	2,40*	—	—	—	—
	0,75	3,00	3,10*	3,10*	3,10*	3,10*	3,10*	3,10*	—	—	—	—
	0,88	3,00	3,90*	3,90*	3,90*	3,90*	3,90*	3,90*	—	—	—	—
	1,00	3,00	4,70	4,70*	4,70*	4,70*	4,70*	4,70*	—	—	—	—
$N_{R,k,II}$ [kN]		3,00	4,70	6,90	6,90	6,90	6,90	6,90	—	—	—	—
max u [mm] for D_F =	40	14,0	7,0	6,0	5,0	5,0	5,0	5,0	—	—	—	—
	60	18,5	10,0	9,0	8,0	8,0	8,0	8,0	—	—	—	—
	80	22,0	12,5	11,0	10,0	10,0	10,0	10,0	—	—	—	—
	100	26,0	19,0	18,0	15,0	15,0	15,0	15,0	—	—	—	—
	120	29,0	22,5	20,0	18,0	18,0	18,0	18,0	—	—	—	—
	140	33,0	26,0	26,0	23,5	21,0	21,0	21,0	—	—	—	—
	≥ 160	33,0	26,0	23,5	21,0	21,0	21,0	21,0	—	—	—	—

- $N_{R,k,II}$: Pull-out resistance of component II
- For t_{N2} made of S320GD or S350GD the indicated values $V_{R,k}$ can be increased by 8,3%.
- For t_{N1} made of S320GD or S350GD the values $N_{R,k}$ marked with * can be increased by 8,3%.

Fastening screws for sandwich panels

Self-drilling screw JT3-(FR-)12-5,5xL, JT6-(FR-)12-5,5xL
with hexagon head or round head with Torx® drive system and sealing washer Ø16 mm

Annex 19

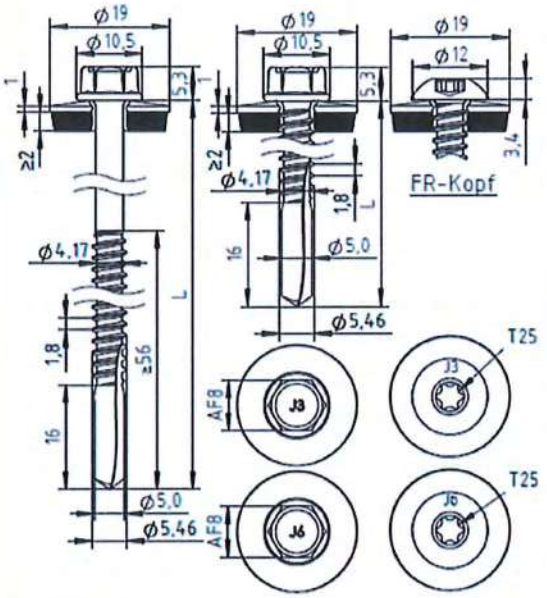

Materials:

Fastener: stainless steel (A2) – EN ISO 3506
stainless steel (A4) – EN ISO 3506

Washer: stainless steel (A2/A4) – EN ISO 3506
with vulcanised EPDM seal

Component I: S280GD to S350GD – EN 10346

Component II: S235 to S355 – EN 10025-1
S280GD to S350GD – EN 10346

Drilling capacity: $\Sigma(t_{N2} + t_{N,II}) \leq 13{,}0$ mm

Timber substructures:

no performance determined

$t_{N,II}$ [mm]		3,00	4,00	5,00	6,00	8,00	10,0	12,0	—	—	—	—
$V_{R,k}$ [kN] for t_{N2} =	0,40	0,90	0,90	0,90	0,90	0,90	0,90	0,90	—	—	—	—
	0,50	0,90	0,90	0,90	0,90	0,90	0,90	0,90	—	—	—	—
	0,55	0,90	0,90	0,90	0,90	0,90	0,90	0,90	—	—	—	—
	0,60	1,03	1,03	1,03	1,03	1,03	1,03	1,03	—	—	—	—
	0,63	1,10	1,10	1,10	1,10	1,10	1,10	1,10	—	—	—	—
	0,75	1,60	1,60	1,60	1,60	1,60	1,60	1,60	—	—	—	—
	0,88	2,20	2,20	2,20	2,20	2,20	2,20	2,20	—	—	—	—
	1,00	2,90	2,90	2,90	2,90	2,90	2,90	2,90	—	—	—	—
$N_{R,k}$ [kN] for t_{N1} =	0,40	1,83*	1,83*	1,83*	1,83*	1,83*	1,83*	1,83*	—	—	—	—
	0,50	1,83*	1,83*	1,83*	1,83*	1,83*	1,83*	1,83*	—	—	—	—
	0,55	2,13*	2,13*	2,13*	2,13*	2,13*	2,13*	2,13*	—	—	—	—
	0,60	2,43	2,43*	2,43*	2,43*	2,43*	2,43*	2,43*	—	—	—	—
	0,63	2,61	2,61*	2,61*	2,61*	2,61*	2,61*	2,61*	—	—	—	—
	0,75	3,00	3,10*	3,10*	3,10*	3,10*	3,10*	3,10*	—	—	—	—
	0,88	3,00	3,90*	3,90*	3,90*	3,90*	3,90*	3,90*	—	—	—	—
	1,00	3,00	4,70	4,70*	4,70*	4,70*	4,70*	4,70*	—	—	—	—
$N_{R,k,II}$ [kN]		3,00	4,70	6,90	6,90	6,90	6,90	6,90	—	—	—	—
max u [mm] for D_F =	40	14,0	7,0	6,0	5,0	5,0	5,0	5,0	—	—	—	—
	60	18,5	10,0	9,0	8,0	8,0	8,0	8,0	—	—	—	—
	80	22,0	12,5	11,0	10,0	10,0	10,0	10,0	—	—	—	—
	100	26,0	19,0	18,0	15,0	15,0	15,0	15,0	—	—	—	—
	120	29,0	22,5	20,0	18,0	18,0	18,0	18,0	—	—	—	—
	140	33,0	26,0	26,0	23,5	21,0	21,0	21,0	—	—	—	—
	≥ 160	33,0	26,0	23,5	21,0	21,0	21,0	21,0	—	—	—	—

- $N_{R,k,II}$: Pull-out resistance of component II
- For t_{N2} made of S320GD or S350GD the indicated values $V_{R,k}$ can be increased by 8,3%.
- For t_{N1} made of S320GD or S350GD the values $N_{R,k}$ marked with * can be increased by 8,3%.

Fastening screws for sandwich panels

Self-drilling screw JT3-(FR-)12-5,5xL, JT6-(FR-)12-5,5xL
with hexagon head or round head with Torx® drive system and sealing washer Ø19 mm

Annex 20

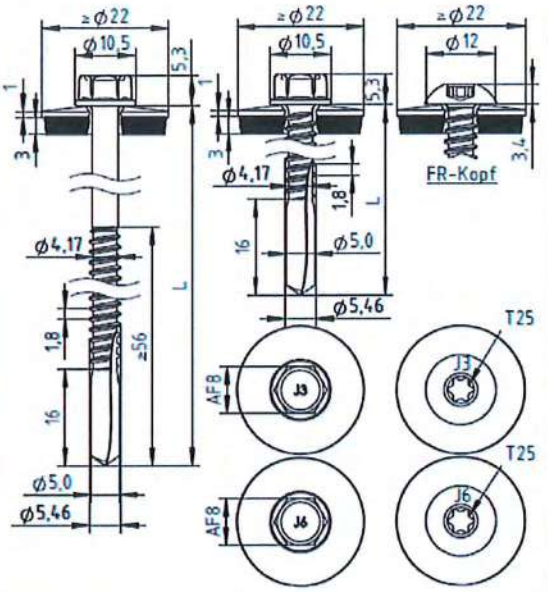

Materials:

Fastener: stainless steel (A2) – EN ISO 3506
stainless steel (A4) – EN ISO 3506

Washer: stainless steel (A2/A4) – EN ISO 3506
with vulcanised EPDM seal

Component I: S280GD to S350GD – EN 10346

Component II: S235 to S355 – EN 10025-1
S280GD to S350GD – EN 10346

Drilling capacity: $\Sigma(t_{N2} + t_{N,II}) \leq 13{,}0$ mm

Timber substructures:

no performance determined

	$t_{N,II}$ [mm]	3,00	4,00	5,00	6,00	8,00	10,0	12,0	—	—	—	—
$V_{R,k}$ [kN] fr t_{N2} =	0,40	0,90	0,90	0,90	0,90	0,90	0,90	0,90	—	—	—	—
	0,50	0,90	0,90	0,90	0,90	0,90	0,90	0,90	—	—	—	—
	0,55	0,90	0,90	0,90	0,90	0,90	0,90	0,90	—	—	—	—
	0,60	1,03	1,03	1,03	1,03	1,03	1,03	1,03	—	—	—	—
	0,63	1,10	1,10	1,10	1,10	1,10	1,10	1,10	—	—	—	—
	0,75	1,60	1,60	1,60	1,60	1,60	1,60	1,60	—	—	—	—
	0,88	2,20	2,20	2,20	2,20	2,20	2,20	2,20	—	—	—	—
	1,00	2,90	2,90	2,90	2,90	2,90	2,90	2,90	—	—	—	—
$N_{R,k}$ [kN] for t_{N1} =	0,40	2,12*	2,12*	2,12*	2,12*	2,12*	2,12*	2,12*	—	—	—	—
	0,50	2,12*	2,12*	2,12*	2,12*	2,12*	2,12*	2,12*	—	—	—	—
	0,55	2,37*	2,37*	2,37*	2,37*	2,37*	2,37*	2,37*	—	—	—	—
	0,60	2,63*	2,63*	2,63*	2,63*	2,63*	2,63*	2,63*	—	—	—	—
	0,63	2,78	2,78*	2,78*	2,78*	2,78*	2,78*	2,78*	—	—	—	—
	0,75	3,00	3,10*	3,10*	3,10*	3,10*	3,10*	3,10*	—	—	—	—
	0,88	3,00	3,90*	3,90*	3,90*	3,90*	3,90*	3,90*	—	—	—	—
	1,00	3,00	4,70	4,70*	4,70*	4,70*	4,70*	4,70*	—	—	—	—
$N_{R,k,II}$ [kN]		3,00	4,70	6,90	6,90	6,90	6,90	6,90	—	—	—	—
max u [mm] for D_F =	40	14,0	7,0	6,0	5,0	5,0	5,0	5,0	—	—	—	—
	60	18,5	10,0	9,0	8,0	8,0	8,0	8,0	—	—	—	—
	80	22,0	12,5	11,0	10,0	10,0	10,0	10,0	—	—	—	—
	100	26,0	19,0	18,0	15,0	15,0	15,0	15,0	—	—	—	—
	120	29,0	22,5	20,0	18,0	18,0	18,0	18,0	—	—	—	—
	140	33,0	26,0	26,0	23,5	21,0	21,0	21,0	—	—	—	—
	≥ 160	33,0	26,0	23,5	21,0	21,0	21,0	21,0	—	—	—	—

- $N_{R,k,II}$: Pull-out resistance of component II
- For t_{N2} made of S320GD or S350GD the indicated values $V_{R,k}$ can be increased by 8,3%.
- For t_{N1} made of S320GD or S350GD the values $N_{R,k}$ marked with * can be increased by 8,3%.

Fastening screws for sandwich panels

Self-drilling screw JT3-(FR-)12-5,5xL, JT6-(FR-)12-5,5xL
with hexagon head or round head with Torx® drive system and sealing washer ≥ Ø22 mm

Annex 21

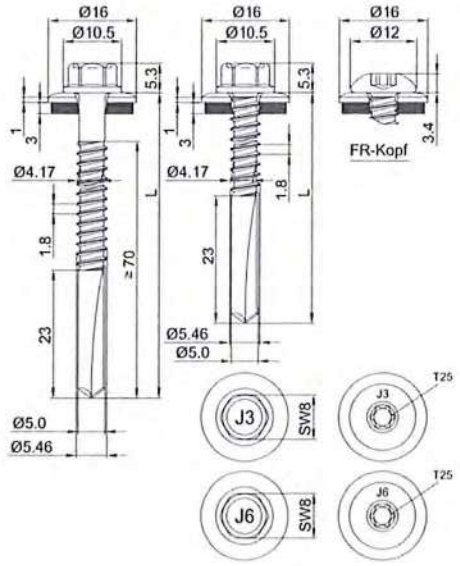

Materials:

Fastener: stainless steel (A2) – EN ISO 3506
stainless steel (A4) – EN ISO 3506

Washer: stainless steel (A2/A4) – EN ISO 3506
with vulcanised EPDM seal

Component I: S280GD to S350GD – EN 10346

Component II: S235 to S355 – EN 10025-1
S280GD to S350GD – EN 10346

Drilling capacity: $\Sigma(t_{N2} + t_{N,II}) \leq 18{,}0$ mm

Timber substructures:

no performance determined

	$t_{N,II}$ [mm]	4,00	5,00	6,00	8,00	10,00	12,00	14,00	16,00	—	—	—
$V_{R,k}$ [kN] for t_{N2} =	0,40	0,90	0,90	0,90	0,90	0,90	0,90	0,90	0,90	—	—	—
	0,50	0,90	0,90	0,90	0,90	0,90	0,90	0,90	0,90	—	—	—
	0,55	0,90	0,90	0,90	0,90	0,90	0,90	0,90	0,90	—	—	—
	0,60	1,03	1,03	1,03	1,03	1,03	1,03	1,03	1,03	—	—	—
	0,63	1,10	1,10	1,10	1,10	1,10	1,10	1,10	1,10	—	—	—
	0,75	1,60	1,60	1,60	1,60	1,60	1,60	1,60	1,60	—	—	—
	0,88	2,20	2,20	2,20	2,20	2,20	2,20	2,20	2,20	—	—	—
	1,00	2,90	2,90	2,90	2,90	2,90	2,90	2,90	2,90	—	—	—
$N_{R,k}$ [kN] for t_{N1} =	0,40	1,54*	1,54*	1,54*	1,54*	1,54*	1,54*	1,54*	1,54*	—	—	—
	0,50	1,70*	1,70*	1,70*	1,70*	1,70*	1,70*	1,70*	1,70*	—	—	—
	0,55	2,00*	2,00*	2,00*	2,00*	2,00*	2,00*	2,00*	2,00*	—	—	—
	0,60	2,25*	2,25*	2,25*	2,25*	2,25*	2,25*	2,25*	2,25*	—	—	—
	0,63	2,40*	2,40*	2,40*	2,40*	2,40*	2,40*	2,40*	2,40*	—	—	—
	0,75	3,10*	3,10*	3,10*	3,10*	3,10*	3,10*	3,10*	3,10*	—	—	—
	0,88	3,90*	3,90*	3,90*	3,90*	3,90*	3,90*	3,90*	3,90*	—	—	—
	1,00	4,70	4,70*	4,70*	4,70*	4,70*	4,70*	4,70*	4,70*	—	—	—
$N_{R,k,II}$ [kN]		4,70	6,90	6,90	6,90	6,90	6,90	6,90	6,90	—	—	—
max u [mm] for D_F =	40	7,0	6,0	5,0	5,0	5,0	5,0	5,0	5,0	—	—	—
	60	10,0	9,0	8,0	8,0	8,0	8,0	8,0	8,0	—	—	—
	80	15,0	13,5	12,0	12,0	12,0	12,0	12,0	12,0	—	—	—
	100	19,0	18,0	15,0	15,0	15,0	15,0	15,0	15,0	—	—	—
	120	22,5	20,0	18,0	18,0	18,0	18,0	18,0	18,0	—	—	—
	140	26,0	23,5	21,0	21,0	21,0	21,0	21,0	21,0	—	—	—
	≥ 160	26,0	23,5	21,0	21,0	21,0	21,0	21,0	21,0	—	—	—

- $N_{R,k,II}$: Pull-out resistance of component II
- For t_{N2} made of S320GD or S350GD the indicated values $V_{R,k}$ can be increased by 8,3%.
- For t_{N1} made of S320GD or S350GD the values $N_{R,k}$ marked with * can be increased by 8,3%.

Fastening screws for sandwich panels

Self-drilling screw JT3-(FR-)18-5,5xL, JT6-(FR-)18-5,5xL
with hexagon head or round head with Torx® drive system and sealing washer Ø16 mm

Annex 22

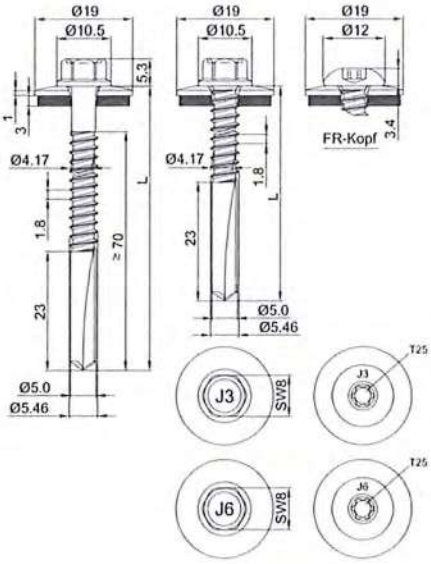

Materials:

Fastener: stainless steel (A2) – EN ISO 3506
stainless steel (A4) – EN ISO 3506

Washer: stainless steel (A2/A4) – EN ISO 3506
with vulcanised EPDM seal

Component I: S280GD to S350GD – EN 10346

Component II: S235 to S355 – EN 10025-1
S280GD to S350GD – EN 10346

Drilling capacity: $\Sigma(t_{N2} + t_{N,II}) \leq 18{,}0$ mm

Timber substructures:

no performance determined

	$t_{N,II}$ [mm]	4,00	5,00	6,00	8,00	10,00	12,00	14,00	16,00	—	—	—
$V_{R,k}$ [kN] for t_{N2} =	0,40	0,90	0,90	0,90	0,90	0,90	0,90	0,90	0,90	—	—	—
	0,50	0,90	0,90	0,90	0,90	0,90	0,90	0,90	0,90	—	—	—
	0,55	0,90	0,90	0,90	0,90	0,90	0,90	0,90	0,90	—	—	—
	0,60	1,03	1,03	1,03	1,03	1,03	1,03	1,03	1,03	—	—	—
	0,63	1,10	1,10	1,10	1,10	1,10	1,10	1,10	1,10	—	—	—
	0,75	1,60	1,60	1,60	1,60	1,60	1,60	1,60	1,60	—	—	—
	0,88	2,20	2,20	2,20	2,20	2,20	2,20	2,20	2,20	—	—	—
	1,00	2,90	2,90	2,90	2,90	2,90	2,90	2,90	2,90	—	—	—
$N_{R,k}$ [kN] for t_{N1} =	0,40	1,84*	1,84*	1,84*	1,84*	1,84*	1,84*	1,84*	1,84*	—	—	—
	0,50	1,84*	1,84*	1,84*	1,84*	1,84*	1,84*	1,84*	1,84*	—	—	—
	0,55	2,14*	2,14*	2,14*	2,14*	2,14*	2,14*	2,14*	2,14*	—	—	—
	0,60	2,43*	2,43*	2,43*	2,43*	2,43*	2,43*	2,43*	2,43*	—	—	—
	0,63	2,61*	2,61*	2,61*	2,61*	2,61*	2,61*	2,61*	2,61*	—	—	—
	0,75	3,10*	3,10*	3,10*	3,10*	3,10*	3,10*	3,10*	3,10*	—	—	—
	0,88	3,90*	3,90*	3,90*	3,90*	3,90*	3,90*	3,90*	3,90*	—	—	—
	1,00	4,70	4,70*	4,70*	4,70*	4,70*	4,70*	4,70*	4,70*	—	—	—
$N_{R,k,II}$ [kN]		4,70	6,90	6,90	6,90	6,90	6,90	6,90	6,90	—	—	—
max u [mm] for D_F =	40	7,0	6,0	5,0	5,0	5,0	5,0	5,0	5,0	—	—	—
	60	10,0	9,0	8,0	8,0	8,0	8,0	8,0	8,0	—	—	—
	80	15,0	13,5	12,0	12,0	12,0	12,0	12,0	12,0	—	—	—
	100	19,0	18,0	15,0	15,0	15,0	15,0	15,0	15,0	—	—	—
	120	22,5	20,0	18,0	18,0	18,0	18,0	18,0	18,0	—	—	—
	140	26,0	23,5	21,0	21,0	21,0	21,0	21,0	21,0	—	—	—
	≥ 160	26,0	23,5	21,0	21,0	21,0	21,0	21,0	21,0	—	—	—

- $N_{R,k,II}$: Pull-out resistance of component II
- For t_{N2} made of S320GD or S350GD the indicated values $V_{R,k}$ can be increased by 8,3%.
- For t_{N1} made of S320GD or S350GD the values $N_{R,k}$ marked with * can be increased by 8,3%.

Fastening screws for sandwich panels

Self-drilling screw JT3-(FR-)18-5,5xL, JT6-(FR-)18-5,5xL
with hexagon head or round head with Torx® drive system and sealing washer Ø19 mm

Annex 23

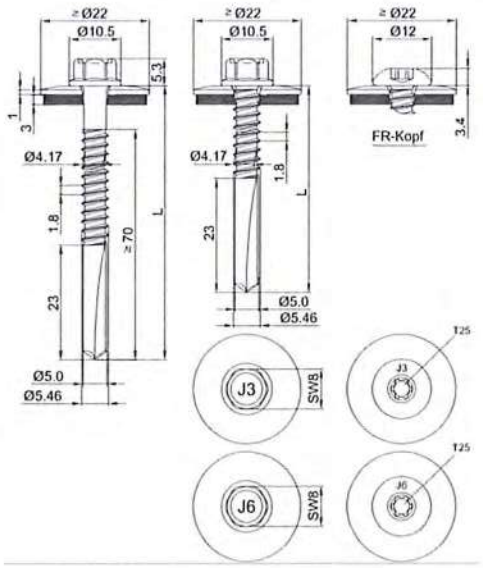

Materials:

Fastener: stainless steel (A2) – EN ISO 3506
stainless steel (A4) – EN ISO 3506

Washer: stainless steel (A2/A4) – EN ISO 3506
with vulcanised EPDM seal

Component I: S280GD to S350GD – EN 10346

Component II: S235 to S355 – EN 10025-1
S280GD to S350GD – EN 10346

Drilling capacity: $\Sigma(t_{N2} + t_{N,II}) \leq 18{,}0$ mm

Timber substructures:

no performance determined

	$t_{N,II}$ [mm]	4,00	5,00	6,00	8,00	10,00	12,00	14,00	16,00	—	—	—
$V_{R,k}$ [kN] for t_{N2} =	0,40	0,90	0,90	0,90	0,90	0,90	0,90	0,90	0,90	—	—	—
	0,50	0,90	0,90	0,90	0,90	0,90	0,90	0,90	0,90	—	—	—
	0,55	0,90	0,90	0,90	0,90	0,90	0,90	0,90	0,90	—	—	—
	0,60	1,03	1,03	1,03	1,03	1,03	1,03	1,03	1,03	—	—	—
	0,63	1,10	1,10	1,10	1,10	1,10	1,10	1,10	1,10	—	—	—
	0,75	1,60	1,60	1,60	1,60	1,60	1,60	1,60	1,60	—	—	—
	0,88	2,20	2,20	2,20	2,20	2,20	2,20	2,20	2,20	—	—	—
	1,00	2,90	2,90	2,90	2,90	2,90	2,90	2,90	2,90	—	—	—
$N_{R,k}$ [kN] for t_{N1} =	0,40	2,13*	2,13*	2,13*	2,13*	2,13*	2,13*	2,13*	2,13*	—	—	—
	0,50	2,13*	2,13*	2,13*	2,13*	2,13*	2,13*	2,13*	2,13*	—	—	—
	0,55	2,38*	2,38*	2,38*	2,38*	2,38*	2,38*	2,38*	2,38*	—	—	—
	0,60	2,63*	2,63*	2,63*	2,63*	2,63*	2,63*	2,63*	2,63*	—	—	—
	0,63	2,78*	2,78*	2,78*	2,78*	2,78*	2,78*	2,78*	2,78*	—	—	—
	0,75	3,10*	3,10*	3,10*	3,10*	3,10*	3,10*	3,10*	3,10*	—	—	—
	0,88	3,90*	3,90*	3,90*	3,90*	3,90*	3,90*	3,90*	3,90*	—	—	—
	1,00	4,70	4,70*	4,70*	4,70*	4,70*	4,70*	4,70*	4,70*	—	—	—
$N_{R,k,II}$ [kN]		4,70	6,90	6,90	6,90	6,90	6,90	6,90	6,90	—	—	—
max u [mm] for D_F =	40	7,0	6,0	5,0	5,0	5,0	5,0	5,0	5,0	—	—	—
	60	10,0	9,0	8,0	8,0	8,0	8,0	8,0	8,0	—	—	—
	80	15,0	13,5	12,0	12,0	12,0	12,0	12,0	12,0	—	—	—
	100	19,0	18,0	15,0	15,0	15,0	15,0	15,0	15,0	—	—	—
	120	22,5	20,0	18,0	18,0	18,0	18,0	18,0	18,0	—	—	—
	140	26,0	23,5	21,0	21,0	21,0	21,0	21,0	21,0	—	—	—
	≥ 160	26,0	23,5	21,0	21,0	21,0	21,0	21,0	21,0	—	—	—

- $N_{R,k,II}$: Pull-out resistance of component II
- For t_{N2} made of S320GD or S350GD the indicated values $V_{R,k}$ can be increased by 8,3%.
- For t_{N1} made of S320GD or S350GD the values $N_{R,k}$ marked with * can be increased by 8,3%.

Fastening screws for sandwich panels

Self-drilling screw JT3-(FR-)18-5,5xL, JT6-(FR-)18-5,5xL
with hexagon head or round head with Torx® drive system and sealing washer ≥ Ø22 mm

Annex 24

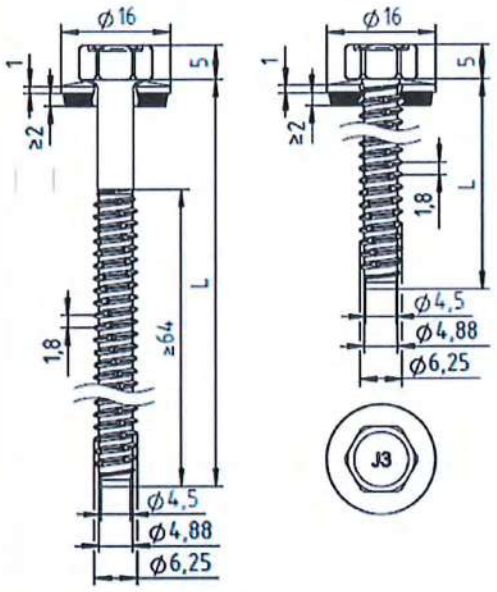

Materials:

Fastener: stainless steel (A2) – EN ISO 3506

Washer: stainless steel (A2/A4) – EN ISO 3506 with vulcanised EPDM seal

Component I: S280GD to S350GD – EN 10346

Component II: S235 to S355 – EN 10025-1
S280GD to S450GD – EN 10346
HX300LAD to HX460LAD – EN 10346

Pre-drill diameter: see table

Timber substructures:

no performance determined

$t_{N,II}$ [mm]		1,50	2,00	2,50	3,00	4,00	5,00	6,00	8,00	≥10,0	—	—
d_{pd} [mm]		5,0	5,3					5,5	5,7		—	—
$V_{R,k}$ [kN] for t_{N2} =	0,40	0,86	0,86	0,86	0,86	0,86	0,86	0,86	0,86	0,86	—	—
	0,50	1,30	1,30	1,30	1,30	1,30	1,30	1,30	1,30	1,30	—	—
	0,55	1,50	1,50	1,50	1,50	1,50	1,50	1,50	1,50	1,50	—	—
	0,60	1,75	1,75	1,75	1,75	1,75	1,75	1,75	1,75	1,75	—	—
	0,63	1,80	1,90	1,90	1,90	1,90	1,90	1,90	1,90	1,90	—	—
	0,75	1,80	1,90	1,90	1,90	1,90	1,90	1,90	1,90	1,90	—	—
	0,88	1,80	1,90	1,90	1,90	1,90	1,90	1,90	1,90	1,90	—	—
	1,00	1,80	1,90	1,90	1,90	1,90	1,90	1,90	1,90	1,90	—	—
$N_{R,k}$ [kN] for t_{N1} =	0,40	1,25*	1,25*	1,25*	1,25*	1,25*	1,25*	1,25*	1,25*	1,25*	—	—
	0,50	1,90*	1,90*	1,90*	1,90*	1,90*	1,90*	1,90*	1,90*	1,90*	—	—
	0,55	2,30*	2,30*	2,30*	2,30*	2,30*	2,30*	2,30*	2,30*	2,30*	—	—
	0,60	2,61	2,61*	2,61*	2,61*	2,61*	2,61*	2,61*	2,61*	2,61*	—	—
	0,63	2,70	2,80*	2,80*	2,80*	2,80*	2,80*	2,80*	2,80*	2,80*	—	—
	0,75	2,70	3,60	3,60	3,60*	3,60*	3,60*	3,60*	3,60*	3,60*	—	—
	0,88	2,70	3,60	3,80	3,80*	3,80*	3,80*	3,80*	3,80*	3,80*	—	—
	1,00	2,70	3,60	4,00	4,00*	4,00*	4,00*	4,00*	4,00*	4,00*	—	—
$N_{R,k,II}$ [kN]		2,70	3,60	4,80	6,00	7,30	7,45	7,60	7,60	7,60	—	—
max u [mm] for D_F =	30	20,0	7,0	7,0	7,0	3,0	3,0	3,0	3,0	3,0	—	—
	40	26,5	10,0	10,0	10,0	4,5	4,5	4,5	4,5	4,5	—	—
	60	40,0	15,5	15,5	15,5	7,0	7,0	7,0	7,0	7,0	—	—
	80	40,0	21,5	21,5	21,5	12,5	12,5	12,5	12,5	12,5	—	—
	100	40,0	27,0	27,0	27,0	18,0	18,0	18,0	18,0	18,0	—	—
	120	40,0	32,5	32,5	32,5	23,5	23,5	23,5	23,5	23,5	—	—
	≥ 140	40,0	38,5	38,5	38,5	29,0	29,0	29,0	29,0	29,0	—	—

- $N_{R,k,II}$: Pull-out resistance of component II, HX340LAD to HX460LAD only for JZ5-6,3xL
- For t_{N2} made of S320GD or S350GD the indicated values $V_{R,k}$ can be increased by 8,3%.
- For t_{N1} made of S320GD or S350GD the values $N_{R,k}$ marked with * can be increased by 8,3%.

Fastening screws for sandwich panels

Self-tapping screw JZ3-6,3xL, JZ5-6,3xL
with hexagon head and sealing washer Ø16 mm

Annex 25

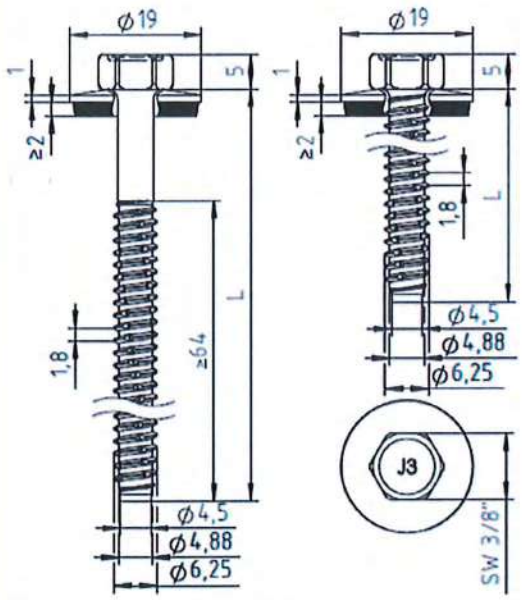

Materials:

Fastener: stainless steel (A2) – EN ISO 3506

Washer: stainless steel (A2/A4) – EN ISO 3506 with vulcanised EPDM seal

Component I: S280GD to S350GD – EN 10346

Component II: S235 to S355 – EN 10025-1
S280GD to S450GD – EN 10346
HX300LAD to HX460LAD – EN 10346

Pre-drill diameter: see table

Timber substructures:

no performance determined

$t_{N,II}$ [mm]		1,50	2,00	2,50	3,00	4,00	5,00	6,00	8,00	≥10,0	—	—
d_{pd} [mm]		5,0	5,3					5,5	5,7		—	—
$V_{R,k}$ [kN] for t_{N2} =	0,40	0,86	0,86	0,86	0,86	0,86	0,86	0,86	0,86	0,86	—	—
	0,50	1,30	1,30	1,30	1,30	1,30	1,30	1,30	1,30	1,30	—	—
	0,55	1,50	1,50	1,50	1,50	1,50	1,50	1,50	1,50	1,50	—	—
	0,60	1,75	1,75	1,75	1,75	1,75	1,75	1,75	1,75	1,75	—	—
	0,63	1,80	1,90	1,90	1,90	1,90	1,90	1,90	1,90	1,90	—	—
	0,75	1,80	1,90	1,90	1,90	1,90	1,90	1,90	1,90	1,90	—	—
	0,88	1,80	1,90	1,90	1,90	1,90	1,90	1,90	1,90	1,90	—	—
	1,00	1,80	1,90	1,90	1,90	1,90	1,90	1,90	1,90	1,90	—	—
$N_{R,k}$ [kN] for t_{N1} =	0,40	1,48*	1,48*	1,48*	1,48*	1,48*	1,48*	1,48*	1,48*	1,48*	—	—
	0,50	1,90*	1,90*	1,90*	1,90*	1,90*	1,90*	1,90*	1,90*	1,90*	—	—
	0,55	2,33*	2,33*	2,33*	2,33*	2,33*	2,33*	2,33*	2,33*	2,33*	—	—
	0,60	2,70	2,77*	2,77*	2,77*	2,77*	2,77*	2,77*	2,77*	2,77*	—	—
	0,63	2,70	3,03*	3,03*	3,03*	3,03*	3,03*	3,03*	3,03*	3,03*	—	—
	0,75	2,70	3,60	3,60*	3,60*	3,60*	3,60*	3,60*	3,60*	3,60*	—	—
	0,88	2,70	3,60	3,80*	3,80*	3,80*	3,80*	3,80*	3,80*	3,80*	—	—
	1,00	2,70	3,60	4,00*	4,00*	4,00*	4,00*	4,00*	4,00*	4,00*	—	—
$N_{R,k,II}$ [kN]		2,70	3,60	4,80	6,00	7,30	7,45	7,60	7,60	7,60	—	—
max u [mm] for D_F =	30	20,0	7,0	7,0	7,0	3,0	3,0	3,0	3,0	3,0	—	—
	40	26,5	10,0	10,0	10,0	4,5	4,5	4,5	4,5	4,5	—	—
	60	40,0	15,5	15,5	15,5	7,0	7,0	7,0	7,0	7,0	—	—
	80	40,0	21,5	21,5	21,5	12,5	12,5	12,5	12,5	12,5	—	—
	100	40,0	27,0	27,0	27,0	18,0	18,0	18,0	18,0	18,0	—	—
	120	40,0	32,5	32,5	32,5	23,5	23,5	23,5	23,5	23,5	—	—
	≥ 140	40,0	38,5	38,5	38,5	29,0	29,0	29,0	29,0	29,0	—	—

- $N_{R,k,II}$: Pull-out resistance of component II, HX340LAD to HX460LAD only for JZ5-6,3xL
- For t_{N2} made of S320GD or S350GD the values $V_{R,k}$ marked with * can be increased by 8,3%.
- For t_{N1} made of S320GD or S350GD the values $N_{R,k}$ marked with * can be increased by 8,3%.

Fastening screws for sandwich panels

Self-tapping screw JZ3-6,3xL, JZ5-6,3xL
with hexagon head and sealing washer Ø19 mm

Annex 26

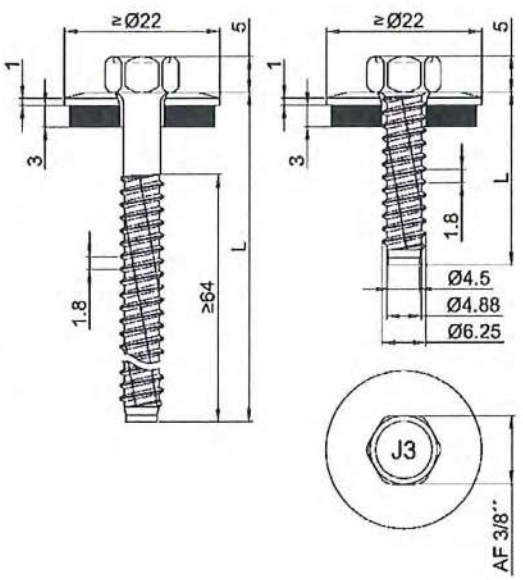

Materials:

Fastener: stainless steel (A2) – EN ISO 3506

Washer: stainless steel (A2/A4) – EN ISO 3506 with vulcanised EPDM seal

Component I: S280GD to S350GD – EN 10346

Component II: S235 to S355 – EN 10025-1
S280GD to S450GD – EN 10346
HX300LAD to HX460LAD – EN 10346

Pre-drill diameter: see table

Timber substructures:

no performance determined

$t_{N,II}$ [mm]		1,50	2,00	2,50	3,00	4,00	5,00	6,00	8,00	≥10,0	—	—
d_{pd} [mm]		5,0	5,3					5,5	5,7		—	—
$V_{R,k}$ [kN] for t_{N2} =	0,40	0,86	0,86	0,86	0,86	0,86	0,86	0,86	0,86	0,86	—	—
	0,50	1,30	1,30	1,30	1,30	1,30	1,30	1,30	1,30	1,30	—	—
	0,55	1,50	1,50	1,50	1,50	1,50	1,50	1,50	1,50	1,50	—	—
	0,60	1,75	1,75	1,75	1,75	1,75	1,75	1,75	1,75	1,75	—	—
	0,63	1,80	1,90	1,90	1,90	1,90	1,90	1,90	1,90	1,90	—	—
	0,75	1,80	1,90	1,90	1,90	1,90	1,90	1,90	1,90	1,90	—	—
	0,88	1,80	1,90	1,90	1,90	1,90	1,90	1,90	1,90	1,90	—	—
	1,00	1,80	1,90	1,90	1,90	1,90	1,90	1,90	1,90	1,90	—	—
$N_{R,k}$ [kN] for t_{N1} =	0,40	1,72*	1,72*	1,72*	1,72*	1,72*	1,72*	1,72*	1,72*	1,72*	—	—
	0,50	2,21*	2,21*	2,21*	2,21*	2,21*	2,21*	2,21*	2,21*	2,21*	—	—
	0,55	2,70	2,77*	2,77*	2,77*	2,77*	2,77*	2,77*	2,77*	2,77*	—	—
	0,60	2,70	3,33	3,33*	3,33*	3,33*	3,33*	3,33*	3,33*	3,33*	—	—
	0,63	2,70	3,60	3,67*	3,67*	3,67*	3,67*	3,67*	3,67*	3,67*	—	—
	0,75	2,70	3,60	3,67*	3,67*	3,67*	3,67*	3,67*	3,67*	3,67*	—	—
	0,88	2,70	3,60	3,80*	3,80*	3,80*	3,80*	3,80*	3,80*	3,80*	—	—
	1,00	2,70	3,60	4,00*	4,00*	4,00*	4,00*	4,00*	4,00*	4,00*	—	—
$N_{R,k,II}$ [kN]		2,70	3,60	4,80	6,00	7,30	7,45	7,60	7,60	7,60	—	—
max u [mm] for D_F =	30	20,0	7,0	7,0	7,0	3,0	3,0	3,0	3,0	3,0	—	—
	40	26,5	10,0	10,0	10,0	4,5	4,5	4,5	4,5	4,5	—	—
	60	40,0	15,5	15,5	15,5	7,0	7,0	7,0	7,0	7,0	—	—
	80	40,0	21,5	21,5	21,5	12,5	12,5	12,5	12,5	12,5	—	—
	100	40,0	27,0	27,0	27,0	18,0	18,0	18,0	18,0	18,0	—	—
	120	40,0	32,5	32,5	32,5	23,5	23,5	23,5	23,5	23,5	—	—
	≥ 140	40,0	38,5	38,5	38,5	29,0	29,0	29,0	29,0	29,0	—	—

- $N_{R,k,II}$: Pull-out resistance of component II. HX340LAD to HX460LAD only for JZ5-6,3xL
- For t_{N2} made of S320GD or S350GD the indicated values $V_{R,k}$ can be increased by 8,3%.
- For t_{N1} made of S320GD or S350GD the values $N_{R,k}$ marked with * can be increased by 8,3%.

Fastening screws for sandwich panels

Self-tapping screw JZ3-6,3xL, JZ5-6,3xL
with hexagon head and sealing washer ≥ Ø22 mm

Annex 27

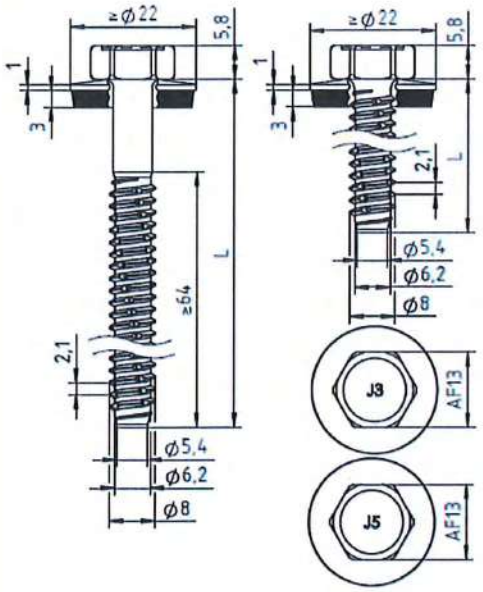

Materials:

Fastener: stainless steel (A2) – EN ISO 3506

Washer: stainless steel (A2/A4) – EN ISO 3506 with vulcanised EPDM seal

Component I: S280GD to S350GD – EN 10346

Component II: S235 – EN 10025-1
S280GD to S350GD – EN 10346

Pre-drill diameter: see table

Timber substructures:

no performance determined

	$t_{N,II}$ [mm]	1,50	2,00	3,00	4,00	6,00	8,00	≥10,0	—	—	—	—
	d_{pd} [mm]	6,8				7,0	7,2	7,4	—	—	—	—
$V_{R,k}$ [kN] for t_{N2} =	0,40	—	—	—	—	—	—	—	—	—	—	—
	0,50	—	—	—	—	—	—	—	—	—	—	—
	0,55	—	—	—	—	—	—	—	—	—	—	—
	0,60	—	—	—	—	—	—	—	—	—	—	—
	0,63	3,80	3,80	3,80	3,80	3,80	3,80	3,80	—	—	—	—
	0,75	4,70	4,70	4,70	4,70	4,70	4,70	4,70	—	—	—	—
	0,88	5,30	5,30	5,30	5,30	5,30	5,30	5,30	—	—	—	—
	1,00	5,90	5,90	5,90	5,90	5,90	5,90	5,90	—	—	—	—
$N_{R,k}$ [kN] for t_{N1} =	0,40	—	—	—	—	—	—	—	—	—	—	—
	0,50	1,19*	1,84*	2,38*	2,38*	2,38*	2,38*	2,38*	—	—	—	—
	0,55	1,50*	2,32*	3,00*	3,00*	3,00*	3,00*	3,00*	—	—	—	—
	0,60	2,20	3,40	3,88*	3,88*	3,88*	3,88*	3,88*	—	—	—	—
	0,63	2,20	3,40	4,40*	4,40*	4,40*	4,40*	4,40*	—	—	—	—
	0,75	2,20	3,40	5,10*	5,30*	5,30*	5,30*	5,30*	—	—	—	—
	0,88	2,20	3,40	5,40*	5,70*	5,70*	5,70*	5,70*	—	—	—	—
	1,00	2,20	3,40	5,80	6,20*	6,20*	6,20*	6,20*	—	—	—	—
	$N_{R,k,II}$ [kN]	2,20	3,40	5,80	6,80	6,80	6,80	6,80	—	—	—	—
max u [mm] for D_F =	30	—	—	—	—	—	—	—	—	—	—	—
	40	8,0	6,0	4,0	3,0	2,8	2,8	2,8	—	—	—	—
	60	12,0	9,0	6,0	4,5	4,2	4,2	4,2	—	—	—	—
	80	16,0	12,0	8,0	6,0	5,6	5,6	5,6	—	—	—	—
	100	20,0	15,0	10,0	7,5	7,0	7,0	7,0	—	—	—	—
	120	24,0	18,0	12,0	9,0	8,4	8,4	8,4	—	—	—	—
	≥ 140	28,0	21,0	14,0	10,5	9,8	9,8	9,8	—	—	—	—

- $N_{R,k,II}$: Pull-out resistance of component II
- For t_{N2} made of S320GD or S350GD the indicated values $V_{R,k}$ can be increased by 8,3%.
- For t_{N1} made of S320GD or S350GD the values $N_{R,k}$ marked with * can be increased by 8,3%.

Fastening screws for sandwich panels

Self-tapping screw JZ3-8,0xL, JZ5-8,0xL
with hexagon head and sealing washer Ø22 mm

Annex 28

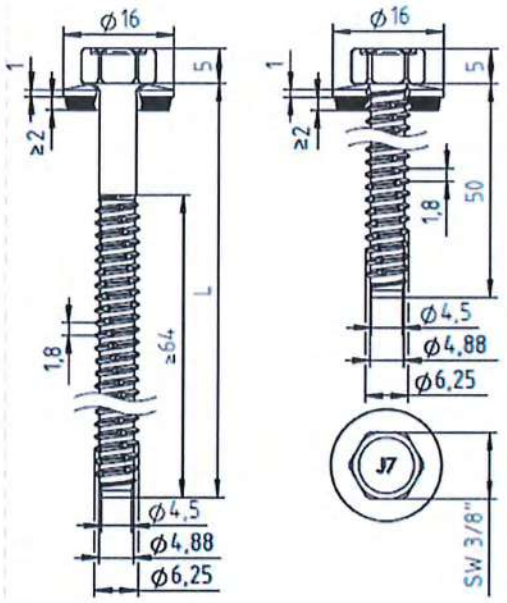

Materials:

Fastener: stainless steel CRONIMAKS®
similar to stainless steel (A2/A4) – EN ISO 3506

Washer: stainless steel (A2/A4) – EN ISO 3506
with vulcanised EPDM seal

Component I: S280GD to S350GD – EN 10346

Component II: S235 to S355 – EN 10025-1
S280GD to S350GD – EN 10346

Pre-drill diameter: see table

Timber substructures:

no performance determined

$t_{N,II}$ [mm]		1,50	2,00	2,50	3,00	4,00	5,00	6,00	8,00	≥10,0	—	—
d_{pd} [mm]		5,0	5,3					5,5	5,7		—	—
$V_{R,k}$ [kN] for t_{N2} =	0,40	0,86	0,86	0,86	0,86	0,86	0,86	0,86	0,86	0,86	—	—
	0,50	1,30	1,30	1,30	1,30	1,30	1,30	1,30	1,30	1,30	—	—
	0,55	1,50	1,50	1,50	1,50	1,50	1,50	1,50	1,50	1,50	—	—
	0,60	1,75	1,75	1,75	1,75	1,75	1,75	1,75	1,75	1,75	—	—
	0,63	1,80	1,90	1,90	1,90	1,90	1,90	1,90	1,90	1,90	—	—
	0,75	1,80	1,90	1,90	1,90	1,90	1,90	1,90	1,90	1,90	—	—
	0,88	1,80	1,90	1,90	1,90	1,90	1,90	1,90	1,90	1,90	—	—
	1,00	1,80	1,90	1,90	1,90	1,90	1,90	1,90	1,90	1,90	—	—
$N_{R,k}$ [kN] for t_{N1} =	0,40	1,25*	1,25*	1,25*	1,25*	1,25*	1,25*	1,25*	1,25*	1,25*	—	—
	0,50	1,90*	1,90*	1,90*	1,90*	1,90*	1,90*	1,90*	1,90*	1,90*	—	—
	0,55	2,30*	2,30*	2,30*	2,30*	2,30*	2,30*	2,30*	2,30*	2,30*	—	—
	0,60	2,61	2,61*	2,61*	2,61*	2,61*	2,61*	2,61*	2,61*	2,61*	—	—
	0,63	2,70	2,80*	2,80*	2,80*	2,80*	2,80*	2,80*	2,80*	2,80*	—	—
	0,75	2,70	3,60	3,60	3,60*	3,60*	3,60*	3,60*	3,60*	3,60*	—	—
	0,88	2,70	3,60	3,80	3,80*	3,80*	3,80*	3,80*	3,80*	3,80*	—	—
	1,00	2,70	3,60	4,00	4,00*	4,00*	4,00*	4,00*	4,00*	4,00*	—	—
$N_{R,k,II}$ [kN]		2,70	3,60	4,80	6,00	7,30	7,45	7,60	7,60	7,60	—	—
max u [mm] for D_F =	30	20,0	7,0	7,0	7,0	3,0	3,0	3,0	3,0	3,0	—	—
	40	26,5	10,0	10,0	10,0	4,5	4,5	4,5	4,5	4,5	—	—
	60	40,0	15,5	15,5	15,5	7,0	7,0	7,0	7,0	7,0	—	—
	80	40,0	21,5	21,5	21,5	12,5	12,5	12,5	12,5	12,5	—	—
	100	40,0	27,0	27,0	27,0	18,0	18,0	18,0	18,0	18,0	—	—
	120	40,0	32,5	32,5	32,5	23,5	23,5	23,5	23,5	23,5	—	—
	≥ 140	40,0	38,5	38,5	38,5	29,0	29,0	29,0	29,0	29,0	—	—

- $N_{R,k,II}$: Pull-out resistance of component II
- For t_{N2} made of S320GD or S350GD the indicated values $V_{R,k}$ can be increased by 8,3%.
- For t_{N1} made of S320GD or S350GD the values $N_{R,k}$ marked with * can be increased by 8,3%.

Fastening screws for sandwich panels

Self-tapping screw JZ7-6,3xL
with hexagon head and sealing washer Ø16 mm

Annex 29

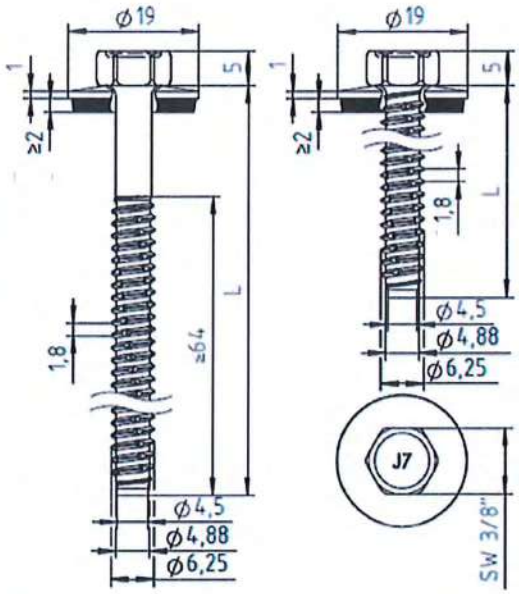

Materials:

Fastener: stainless steel CRONIMAKS®
similar to stainless steel (A2/A4) – EN ISO 3506

Washer: stainless steel (A2/A4) – EN ISO 3506
with vulcanised EPDM seal

Component I: S280GD to S350GD – EN 10346

Component II: S235 to S355 – EN 10025-1
S280GD to S350GD – EN 10346

Pre-drill diameter: see table

Timber substructures:

no performance determined

$t_{N,II}$ [mm]		1,50	2,00	2,50	3,00	4,00	5,00	6,00	8,00	≥10,0	—	—
d_{pd} [mm]		5,0	5,3					5,5	5,7		—	—
$V_{R,k}$ [kN] for t_{N2} =	0,40	0,86	0,86	0,86	0,86	0,86	0,86	0,86	0,86	0,86	—	—
	0,50	1,30	1,30	1,30	1,30	1,30	1,30	1,30	1,30	1,30	—	—
	0,55	1,50	1,50	1,50	1,50	1,50	1,50	1,50	1,50	1,50	—	—
	0,60	1,75	1,75	1,75	1,75	1,75	1,75	1,75	1,75	1,75	—	—
	0,63	1,80	1,90	1,90	1,90	1,90	1,90	1,90	1,90	1,90	—	—
	0,75	1,80	1,90	1,90	1,90	1,90	1,90	1,90	1,90	1,90	—	—
	0,88	1,80	1,90	1,90	1,90	1,90	1,90	1,90	1,90	1,90	—	—
	1,00	1,80	1,90	1,90	1,90	1,90	1,90	1,90	1,90	1,90	—	—
$N_{R,k}$ [kN] for t_{N1} =	0,40	1,48*	1,48*	1,48*	1,48*	1,48*	1,48*	1,48*	1,48*	1,48*	—	—
	0,50	1,90*	1,90*	1,90*	1,90*	1,90*	1,90*	1,90*	1,90*	1,90*	—	—
	0,55	2,33*	2,33*	2,33*	2,33*	2,33*	2,33*	2,33*	2,33*	2,33*	—	—
	0,60	2,70	2,77*	2,77*	2,77*	2,77*	2,77*	2,77*	2,77*	2,77*	—	—
	0,63	2,70	3,03*	3,03*	3,03*	3,03*	3,03*	3,03*	3,03*	3,03*	—	—
	0,75	2,70	3,60	3,60*	3,60*	3,60*	3,60*	3,60*	3,60*	3,60*	—	—
	0,88	2,70	3,60	3,80*	3,80*	3,80*	3,80*	3,80*	3,80*	3,80*	—	—
	1,00	2,70	3,60	4,00*	4,00*	4,00*	4,00*	4,00*	4,00*	4,00*	—	—
$N_{R,k,II}$ [kN]		2,70	3,60	4,80	6,00	7,30	7,45	7,60	7,60	7,60	—	—
max u [mm] for D_F =	30	20,0	7,0	7,0	7,0	3,0	3,0	3,0	3,0	3,0	—	—
	40	26,5	10,0	10,0	10,0	4,5	4,5	4,5	4,5	4,5	—	—
	60	40,0	15,5	15,5	15,5	7,0	7,0	7,0	7,0	7,0	—	—
	80	40,0	21,5	21,5	21,5	12,5	12,5	12,5	12,5	12,5	—	—
	100	40,0	27,0	27,0	27,0	18,0	18,0	18,0	18,0	18,0	—	—
	120	40,0	32,5	32,5	32,5	23,5	23,5	23,5	23,5	23,5	—	—
	≥ 140	40,0	38,5	38,5	38,5	29,0	29,0	29,0	29,0	29,0	—	—

- $N_{R,k,II}$: Pull-out resistance of component II
- For t_{N2} made of S320GD or S350GD the indicated values $V_{R,k}$ can be increased by 8,3%.
- For t_{N1} made of S320GD or S350GD the values $N_{R,k}$ marked with * can be increased by 8,3%.

Fastening screws for sandwich panels

Self-tapping screw JZ7-6,3xL
with hexagon head and sealing washer Ø19 mm

Annex 30

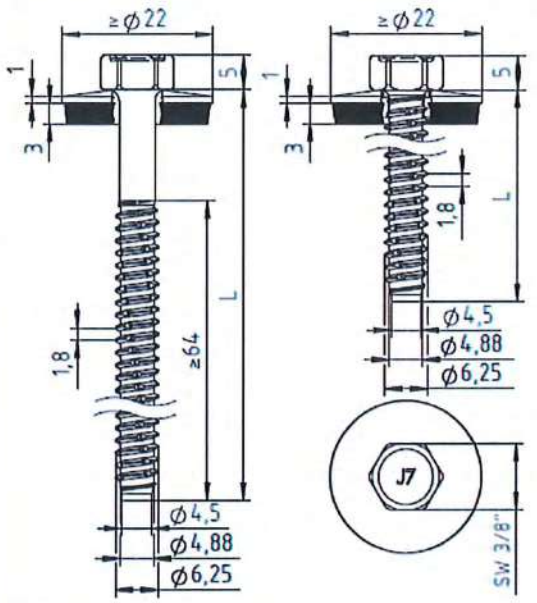

Materials:

Fastener: stainless steel CRONIMAKS®
similar to stainless steel (A2/A4) – EN ISO 3506

Washer: stainless steel (A2/A4) – EN ISO 3506
with vulcanised EPDM seal

Component I: S280GD, S320GD oder S350GD – EN 10346

Component II: S235 to S355 – EN 10025-1
S280GD to S350GD – EN 10346

Pre-drill diameter: see table

Timber substructures:

no performance determined

$t_{N,II}$ [mm]		1,50	2,00	2,50	3,00	4,00	5,00	6,00	8,00	≥10,0	—	—
d_{pd} [mm]		5,0	5,3					5,5	5,7		—	—
$V_{R,k}$ [kN] for t_{N2} =	0,40	0,86	0,86	0,86	0,86	0,86	0,86	0,86	0,86	0,86	—	—
	0,50	1,30	1,30	1,30	1,30	1,30	1,30	1,30	1,30	1,30	—	—
	0,55	1,50	1,50	1,50	1,50	1,50	1,50	1,50	1,50	1,50	—	—
	0,60	1,75	1,75	1,75	1,75	1,75	1,75	1,75	1,75	1,75	—	—
	0,63	1,80	1,90	1,90	1,90	1,90	1,90	1,90	1,90	1,90	—	—
	0,75	1,80	1,90	1,90	1,90	1,90	1,90	1,90	1,90	1,90	—	—
	0,88	1,80	1,90	1,90	1,90	1,90	1,90	1,90	1,90	1,90	—	—
	1,00	1,80	1,90	1,90	1,90	1,90	1,90	1,90	1,90	1,90	—	—
$N_{R,k}$ [kN] for t_{N1} =	0,40	1,72*	1,72*	1,72*	1,72*	1,72*	1,72*	1,72*	1,72*	1,72*	—	—
	0,50	2,21*	2,21*	2,21*	2,21*	2,21*	2,21*	2,21*	2,21*	2,21*	—	—
	0,55	2,70	2,77*	2,77*	2,77*	2,77*	2,77*	2,77*	2,77*	2,77*	—	—
	0,60	2,70	3,33	3,33*	3,33*	3,33*	3,33*	3,33*	3,33*	3,33*	—	—
	0,63	2,70	3,60	3,67*	3,67*	3,67*	3,67*	3,67*	3,67*	3,67*	—	—
	0,75	2,70	3,60	3,67*	3,67*	3,67*	3,67*	3,67*	3,67*	3,67*	—	—
	0,88	2,70	3,60	3,80*	3,80*	3,80*	3,80*	3,80*	3,80*	3,80*	—	—
	1,00	2,70	3,60	4,00*	4,00*	4,00*	4,00*	4,00*	4,00*	4,00*	—	—
$N_{R,k,II}$ [kN]		2,70	3,60	4,80	6,00	7,30	7,45	7,60	7,60	7,60	—	—
max u [mm] for D_F =	30	20,0	7,0	7,0	7,0	3,0	3,0	3,0	3,0	3,0	—	—
	40	26,5	10,0	10,0	10,0	4,5	4,5	4,5	4,5	4,5	—	—
	60	40,0	15,5	15,5	15,5	7,0	7,0	7,0	7,0	7,0	—	—
	80	40,0	21,5	21,5	21,5	12,5	12,5	12,5	12,5	12,5	—	—
	100	40,0	27,0	27,0	27,0	18,0	18,0	18,0	18,0	18,0	—	—
	120	40,0	32,5	32,5	32,5	23,5	23,5	23,5	23,5	23,5	—	—
	≥ 140	40,0	38,5	38,5	38,5	29,0	29,0	29,0	29,0	29,0	—	—

- $N_{R,k,II}$: Pull-out resistance of component II
- For t_{N2} made of S320GD or S350GD the indicated values $V_{R,k}$ can be increased by 8,3%.
- For t_{N1} made of S320GD or S350GD the values $N_{R,k}$ marked with * can be increased by 8,3%.

Fastening screws for sandwich panels

Self-tapping screw JZ7-6,3xL
with hexagon head and sealing washer ≥ Ø22 mm

Annex 31

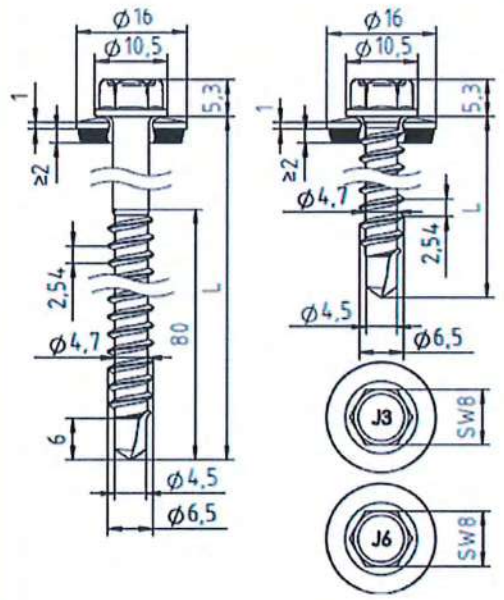

Materials:

Fastener: stainless steel (A2) – EN ISO 3506
stainless steel (A4) – EN ISO 3506

Washer: stainless steel (A2/A4) – EN ISO 3506
with vulcanised EPDM seal

Component I: S280GD – EN 10346

Component II: timber – EN 14081

Drilling capacity: $\Sigma t_i \leq 2{,}00$ mm

Timber substructures

performance determined with
$M_{y,Rk}$ = 9,742 Nm
$f_{ax,k}$ = 11,810 N/mm² for $l_{ef} \geq 44$ mm

	l_g [mm]	50	53	56	59	62	65	68	71	74	77	80		
$V_{R,k}$ [kN] for t_{N2} =	0,40	1,03	1,03	1,03	1,03	1,03	1,03	1,03	1,03	1,03	1,03	1,03	1,03	$V_{R,k,I}$ [kN]
	0,50	1,10	1,10	1,10	1,10	1,10	1,10	1,10	1,10	1,10	1,10	1,10	1,10	
	0,55	1,20	1,20	1,20	1,20	1,20	1,20	1,20	1,20	1,20	1,20	1,20	1,20	
	0,60	1,26	1,26	1,26	1,26	1,26	1,26	1,26	1,26	1,26	1,26	1,26	1,26	
	0,63	1,30	1,30	1,30	1,30	1,30	1,30	1,30	1,30	1,30	1,30	1,30	1,30	
	0,75	1,30	1,30	1,30	1,30	1,30	1,30	1,30	1,30	1,30	1,30	1,30	1,30	
	0,88	1,30	1,30	1,30	1,30	1,30	1,30	1,30	1,30	1,30	1,30	1,30	1,30	
	1,00	1,30	1,30	1,30	1,30	1,30	1,30	1,30	1,30	1,30	1,30	1,30	1,30	
$N_{R,k}$ [kN] for t_{N1} =	0,40	1,24*	1,24*	1,24*	1,24*	1,24*	1,24*	1,24*	1,24*	1,24*	1,24*	1,24*	1,24*	$N_{R,k,I}$ [kN] =
	0,50	1,80*	1,80*	1,80*	1,80*	1,80*	1,80*	1,80*	1,80*	1,80*	1,80*	1,80*	1,80*	
	0,55	1,90*	1,90*	1,90*	1,90*	1,90*	1,90*	1,90*	1,90*	1,90*	1,90*	1,90*	1,90*	
	0,60	2,28*	2,28*	2,28*	2,28*	2,28*	2,28*	2,28*	2,28*	2,28*	2,28*	2,28*	2,28*	
	0,63	2,50*	2,50*	2,50*	2,50*	2,50*	2,50*	2,50*	2,50*	2,50*	2,50*	2,50*	2,50*	
	0,75	3,04	3,25	3,30	3,30*	3,30*	3,30*	3,30*	3,30*	3,30*	3,30*	3,30*	3,30*	
	0,88	3,04	3,25	3,45	3,66	3,87	4,08	4,10	4,10*	4,10*	4,10*	4,10*	4,10*	
	1,00	3,04	3,25	3,45	3,66	3,87	4,08	4,28	4,49	4,70	4,90	4,90	4,90*	
max u [mm] for D_F =	30	4,0	4,0	4,0	4,0	4,0	4,0	4,0	4,0	4,0	4,0	4,0	4,0	max u [mm] for D_F =
	40	5,5	5,5	5,5	5,5	5,5	5,5	5,5	5,5	5,5	5,5	5,5	5,5	
	60	9,0	9,0	9,0	9,0	9,0	9,0	9,0	9,0	9,0	9,0	9,0	9,0	
	80	13,5	13,5	13,5	13,5	13,5	13,5	13,5	13,5	13,5	13,5	13,5	13,5	
	100	18,0	18,0	18,0	18,0	18,0	18,0	18,0	18,0	18,0	18,0	18,0	18,0	
	120	18,0	18,0	18,0	18,0	18,0	18,0	18,0	18,0	18,0	18,0	18,0	18,0	
	≥ 140	18,0	18,0	18,0	18,0	18,0	18,0	18,0	18,0	18,0	18,0	18,0	18,0	

- The values indicated above, depending on the screw depth l_g shall apply to k_{mod} =0,90 and the timber strength class C24 (ρ_k = 350 kg/m³). For other values of k_{mod} and strength classes see chapter 4.2.2.
- For t_{N2} made of S320GD or S350GD the indicated values $V_{R,k}$ can be increased by 8,3%.
- For t_{N1} made of S320GD or S350GD the values $N_{R,k}$ marked with * can be increased by 8,3%.

Fastening screws for sandwich panels

Self-drilling screw JT3-2-6,5xL, JT6-2-6,5xL
with hexagon head and sealing washer ≥ Ø16 mm

Annex 32

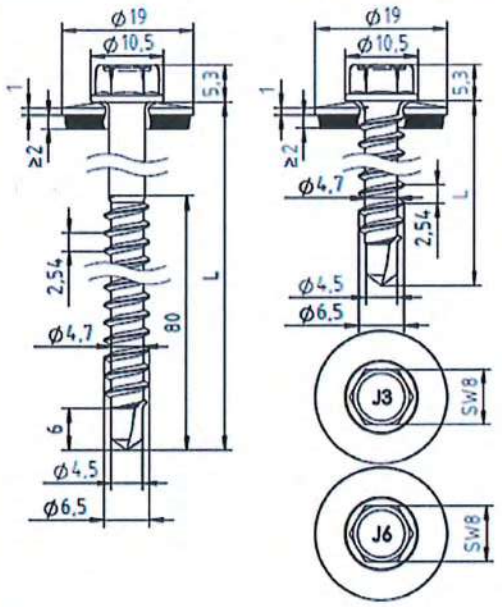

Materials:

Fastener: stainless steel (A2) – EN ISO 3506
stainless steel (A4) – EN ISO 3506

Washer: stainless steel (A2/A4) – EN ISO 3506
with vulcanised EPDM seal

Component I: S280GD – EN 10346

Component II: timber – EN 14081

Drilling capacity: $\Sigma t_I \leq 2{,}00$ mm

Timber substructures

performance determined with
$M_{y,Rk}$ = 9,742 Nm
$f_{ax,k}$ = 11,810 N/mm² for $l_{ef} \geq 44$ mm

	l_g [mm]	50	53	56	59	62	65	68	71	74	77	80		
$V_{R,k}$ [kN] for t_{N2} =	0,40	1,03	1,03	1,03	1,03	1,03	1,03	1,03	1,03	1,03	1,03	1,03	1,03	$V_{R,k,I}$ [kN]
	0,50	1,10	1,10	1,10	1,10	1,10	1,10	1,10	1,10	1,10	1,10	1,10	1,10	
	0,55	1,20	1,20	1,20	1,20	1,20	1,20	1,20	1,20	1,20	1,20	1,20	1,20	
	0,60	1,26	1,26	1,26	1,26	1,26	1,26	1,26	1,26	1,26	1,26	1,26	1,26	
	0,63	1,30	1,30	1,30	1,30	1,30	1,30	1,30	1,30	1,30	1,30	1,30	1,30	
	0,75	1,30	1,30	1,30	1,30	1,30	1,30	1,30	1,30	1,30	1,30	1,30	1,30	
	0,88	1,30	1,30	1,30	1,30	1,30	1,30	1,30	1,30	1,30	1,30	1,30	1,30	
	1,00	1,30	1,30	1,30	1,30	1,30	1,30	1,30	1,30	1,30	1,30	1,30	1,30	
$N_{R,k}$ [kN] for t_{N1} =	0,40	1,47*	1,47*	1,47*	1,47*	1,47*	1,47*	1,47*	1,47*	1,47*	1,47*	1,47*	1,47*	$N_{R,k,I}$ [kN] =
	0,50	1,90*	1,90*	1,90*	1,90*	1,90*	1,90*	1,90*	1,90*	1,90*	1,90*	1,90*	1,90*	
	0,55	2,33*	2,33*	2,33*	2,33*	2,33*	2,33*	2,33*	2,33*	2,33*	2,33*	2,33*	2,33*	
	0,60	2,77*	2,77*	2,77*	2,77*	2,77*	2,77*	2,77*	2,77*	2,77*	2,77*	2,77*	2,77*	
	0,63	3,03	3,03	3,03*	3,03*	3,03*	3,03*	3,03*	3,03*	3,03*	3,03*	3,03*	3,03*	
	0,75	3,04	3,25	3,30	3,30*	3,30*	3,30*	3,30*	3,30*	3,30*	3,30*	3,30*	3,30*	
	0,88	3,04	3,25	3,45	3,66	3,87	4,08	4,10	4,10*	4,10*	4,10*	4,10*	4,10*	
	1,00	3,04	3,25	3,45	3,66	3,87	4,08	4,28	4,49	4,70	4,90	4,90	4,90*	
max u [mm] for D_F =	30	4,0	4,0	4,0	4,0	4,0	4,0	4,0	4,0	4,0	4,0	4,0	4,0	max u [mm] for D_F =
	40	5,5	5,5	5,5	5,5	5,5	5,5	5,5	5,5	5,5	5,5	5,5	5,5	
	60	9,0	9,0	9,0	9,0	9,0	9,0	9,0	9,0	9,0	9,0	9,0	9,0	
	80	13,5	13,5	13,5	13,5	13,5	13,5	13,5	13,5	13,5	13,5	13,5	13,5	
	100	18,0	18,0	18,0	18,0	18,0	18,0	18,0	18,0	18,0	18,0	18,0	18,0	
	120	18,0	18,0	18,0	18,0	18,0	18,0	18,0	18,0	18,0	18,0	18,0	18,0	
	≥ 140	18,0	18,0	18,0	18,0	18,0	18,0	18,0	18,0	18,0	18,0	18,0	18,0	

- The values indicated above, depending on the screw depth l_g shall apply to k_{mod} =0,90 and the timber strength class C24 (ρ_k = 350 kg/m³). For other values of k_{mod} and strength classes see chapter 4.2.2.
- For t_{N2} made of S320GD or S350GD the indicated values $V_{R,k}$ can be increased by 8,3%.
- For t_{N1} made of S320GD or S350GD the values $N_{R,k}$ marked with * can be increased by 8,3%.

Fastening screws for sandwich panels

Self-drilling screw JT3-2-6,5xL, JT6-2-6,5xL
with hexagon head and sealing washer Ø19 mm

Annex 33

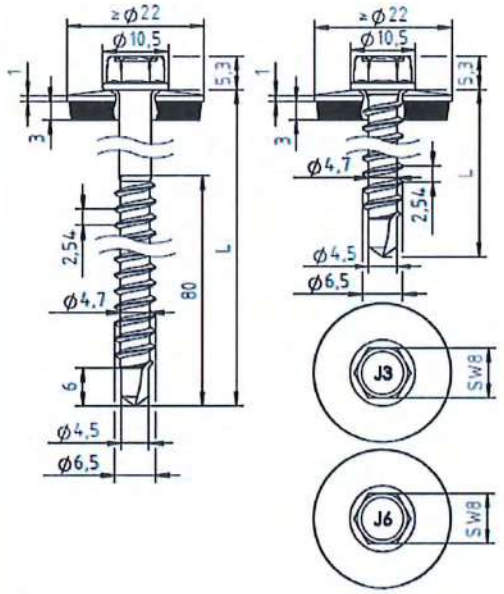

Materials

Fastener: stainless steel (A2) – EN ISO 3506
stainless steel (A4) – EN ISO 3506

Washer: stainless steel (A2/A4) – EN ISO 3506
with vulcanised EPDM seal

Componentl I: S280GD to S350GD – EN 10346

Component II: timber– EN 14081

Drilling capacity: $t_{N2} \leq 2{,}00$ mm

Timber substructures:

performance determined with
$M_{y,Rk}$ = 9,742 Nm
$f_{ax,k}$ = 11,810 N/mm² for $l_{ef} \geq 44$ mm

l_g [mm]		50	53	56	59	62	65	68	71	74	77	80		
$V_{R,k}$ [kN] for t_{N2} =	0,40	1,03	1,03	1,03	1,03	1,03	1,03	1,03	1,03	1,03	1,03	1,03	1,03	$V_{R,k,I}$ [kN]
	0,50	1,10	1,10	1,10	1,10	1,10	1,10	1,10	1,10	1,10	1,10	1,10	1,10	
	0,55	1,20	1,20	1,20	1,20	1,20	1,20	1,20	1,20	1,20	1,20	1,20	1,20	
	0,60	1,26	1,26	1,26	1,26	1,26	1,26	1,26	1,26	1,26	1,26	1,26	1,26	
	0,63	1,30	1,30	1,30	1,30	1,30	1,30	1,30	1,30	1,30	1,30	1,30	1,30	
	0,75	1,30	1,30	1,30	1,30	1,30	1,30	1,30	1,30	1,30	1,30	1,30	1,30	
	0,88	1,30	1,30	1,30	1,30	1,30	1,30	1,30	1,30	1,30	1,30	1,30	1,30	
	1,00	1,30	1,30	1,30	1,30	1,30	1,30	1,30	1,30	1,30	1,30	1,30	1,30	
$N_{R,k}$ [kN] for t_{N1} =	0,40	1,71*	1,71*	1,71*	1,71*	1,71*	1,71*	1,71*	1,71*	1,71*	1,71*	1,71*	1,71*	$N_{R,k,I}$ [kN] =
	0,50	2,21*	2,21*	2,21*	2,21*	2,21*	2,21*	2,21*	2,21*	2,21*	2,21*	2,21*	2,21*	
	0,55	2,77*	2,77*	2,77*	2,77*	2,77*	2,77*	2,77*	2,77*	2,77*	2,77*	2,77*	2,77*	
	0,60	3,04	3,25	3,33	3,33*	3,33*	3,33*	3,33*	3,33*	3,33*	3,33*	3,33*	3,33*	
	0,63	3,04	3,25	3,45	3,66	3,67	3,67*	3,67*	3,67*	3,67*	3,67*	3,67*	3,67*	
	0,75	3,04	3,25	3,45	3,66	3,67	3,67*	3,67*	3,67*	3,67*	3,67*	3,67*	3,67*	
	0,88	3,04	3,25	3,45	3,66	3,87	4,08	4,10	4,10*	4,10*	4,10*	4,10*	4,10*	
	1,00	3,04	3,25	3,45	3,66	3,87	4,08	4,28	4,49	4,70	4,90	4,90	4,90*	
max u [mm] for D_F =	30	4,0	4,0	4,0	4,0	4,0	4,0	4,0	4,0	4,0	4,0	4,0	4,0	max u [mm] for D_F =
	40	5,5	5,5	5,5	5,5	5,5	5,5	5,5	5,5	5,5	5,5	5,5	5,5	
	60	9,0	9,0	9,0	9,0	9,0	9,0	9,0	9,0	9,0	9,0	9,0	9,0	
	80	13,5	13,5	13,5	13,5	13,5	13,5	13,5	13,5	13,5	13,5	13,5	13,5	
	100	18,0	18,0	18,0	18,0	18,0	18,0	18,0	18,0	18,0	18,0	18,0	18,0	
	120	18,0	18,0	18,0	18,0	18,0	18,0	18,0	18,0	18,0	18,0	18,0	18,0	
	≥ 140	18,0	18,0	18,0	18,0	18,0	18,0	18,0	18,0	18,0	18,0	18,0	18,0	

- The values indicated above, depending on the screw depth l_g shall apply to k_{mod} =0,90 and the timber strength class C24 (ρ_k = 350 kg/m³). For other values of k_{mod} and strength classes see chapter 4.2.2.
- For t_{N2} made of S320GD or S350GD the indicated values $V_{R,k}$ can be increased by 8,3%.
- For t_{N1} made of S320GD or S350GD the values $N_{R,k}$ marked with * can be increased by 8,3%.

Fastening screws for sandwich panels

Self-drilling screw JT3-2-6,5xL, JT6-2-6,5xL
with hexagon head and sealing washer ≥ Ø22 mm

Annex 34

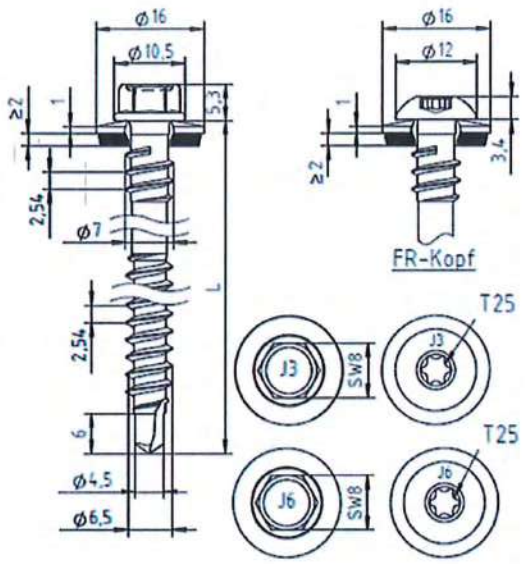

Materials

Fastener: stainless steel (A2) – EN ISO 3506
stainless steel (A4) – EN ISO 3506

Washer: stainless steel (A2/A4) – EN ISO 3506
with vulcanised EPDM seal

Componentl I: S280GD to S350GD – EN 10346

Component II: timber– EN 14081

Drilling capacity: $t_{N2} \leq 2{,}00$ mm

Timber substructures:

performance determined with
$M_{y,Rk}$ = 9,742 Nm
$f_{ax,k}$ = 11,810 N/mm² for $l_{ef} \geq 44$ mm

l_g [mm]		50	53	56	59	62	65	68	71	74	77	80		
$V_{R,k}$ [kN] for t_{N2} =	0,40	1,03	1,03	1,03	1,03	1,03	1,03	1,03	1,03	1,03	1,03	1,03	1,03	$V_{R,k,I}$ [kN]
	0,50	1,10	1,10	1,10	1,10	1,10	1,10	1,10	1,10	1,10	1,10	1,10	1,10	
	0,55	1,20	1,20	1,20	1,20	1,20	1,20	1,20	1,20	1,20	1,20	1,20	1,20	
	0,60	1,26	1,26	1,26	1,26	1,26	1,26	1,26	1,26	1,26	1,26	1,26	1,26	
	0,63	1,30	1,30	1,30	1,30	1,30	1,30	1,30	1,30	1,30	1,30	1,30	1,30	
	0,75	1,30	1,30	1,30	1,30	1,30	1,30	1,30	1,30	1,30	1,30	1,30	1,30	
	0,88	1,30	1,30	1,30	1,30	1,30	1,30	1,30	1,30	1,30	1,30	1,30	1,30	
	1,00	1,30	1,30	1,30	1,30	1,30	1,30	1,30	1,30	1,30	1,30	1,30	1,30	
$N_{R,k}$ [kN] for t_{N1} =	0,40	1,57*	1,57*	1,57*	1,57*	1,57*	1,57*	1,57*	1,57*	1,57*	1,57*	1,57*	1,57*	$N_{R,k,I}$ [kN] =
	0,50	1,70*	1,70*	1,70*	1,70*	1,70*	1,70*	1,70*	1,70*	1,70*	1,70*	1,70*	1,70*	
	0,55	2,00*	2,00*	2,00*	2,00*	2,00*	2,00*	2,00*	2,00*	2,00*	2,00*	2,00*	2,00*	
	0,60	2,13*	2,13*	2,13*	2,13*	2,13*	2,13*	2,13*	2,13*	2,13*	2,13*	2,13*	2,13*	
	0,63	2,20*	2,20*	2,20*	2,20*	2,20*	2,20*	2,20*	2,20*	2,20*	2,20*	2,20*	2,20*	
	0,75	3,04	3,25	3,40	3,40*	3,40*	3,40*	3,40*	3,40*	3,40*	3,40*	3,40*	3,40*	
	0,88	3,04	3,25	3,45	3,66	3,87	4,08	4,10	4,10	4,10*	4,10*	4,10*	4,10*	
	1,00	3,04	3,25	3,45	3,66	3,87	4,08	4,28	4,49	4,70	4,90	4,90	4,90*	
max u [mm] for D_F =	30	4,0	4,0	4,0	4,0	4,0	4,0	4,0	4,0	4,0	4,0	4,0	4,0	max u [mm] for D_F =
	40	5,5	5,5	5,5	5,5	5,5	5,5	5,5	5,5	5,5	5,5	5,5	5,5	
	60	9,0	9,0	9,0	9,0	9,0	9,0	9,0	9,0	9,0	9,0	9,0	9,0	
	80	13,5	13,5	13,5	13,5	13,5	13,5	13,5	13,5	13,5	13,5	13,5	13,5	
	100	18,0	18,0	18,0	18,0	18,0	18,0	18,0	18,0	18,0	18,0	18,0	18,0	
	120	18,0	18,0	18,0	18,0	18,0	18,0	18,0	18,0	18,0	18,0	18,0	18,0	
	≥ 140	18,0	18,0	18,0	18,0	18,0	18,0	18,0	18,0	18,0	18,0	18,0	18,0	

- The values indicated above, depending on the screw depth l_g shall apply to k_{mod} =0,90 and the timber strength class C24 (ρ_k = 350 kg/m³). For other values of k_{mod} and strength classes see chapter 4.2.2.
- For t_{N2} made of S320GD or S350GD the indicated values $V_{R,k}$ can be increased by 8,3%.
- For t_{N1} made of S320GD or S350GD the values $N_{R,k}$ marked with * can be increased by 8,3%.

Fastening screws for sandwich panels

Self-drilling screw JT3-D-(FR-)2H-6,5/7,0xL, JT6-D-(FR-)2H-6,5/7,0xL
with hexagon head or round head with Torx® drive system and sealing washer ≥ Ø16 mm

Annex 35

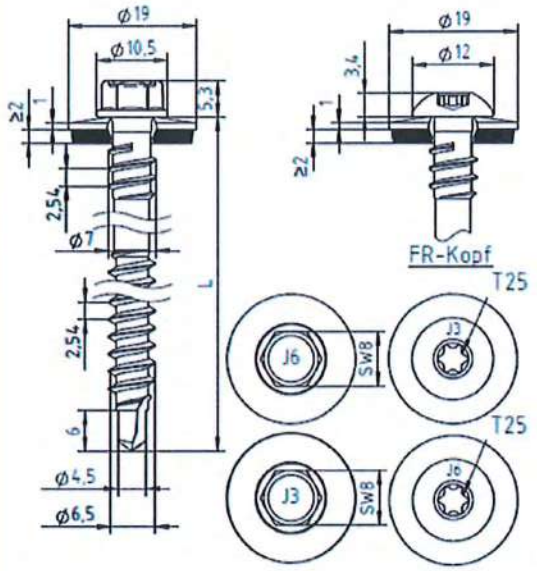

Materials

Fastener: stainless steel (A2) – EN ISO 3506
stainless steel (A4) – EN ISO 3506

Washer: stainless steel (A2/A4) – EN ISO 3506
with vulcanised EPDM seal

Componentl I: S280GD to S350GD – EN 10346

Component II: timber– EN 14081

Drilling capacity: $t_{N2} \leq 2{,}00$ mm

Timber substructures:

performance determined with
$M_{y,Rk}$ = 9,742 Nm
$f_{ax,k}$ = 11,810 N/mm² for $l_{ef} \geq 44$ mm

l_g [mm]		50	53	56	59	62	65	68	71	74	77	80		
$V_{R,k}$ [kN] fo r t_{N2} =	0,40	1,03	1,03	1,03	1,03	1,03	1,03	1,03	1,03	1,03	1,03	1,03	1,03	$V_{R,k,I}$ [kN]
	0,50	1,10	1,10	1,10	1,10	1,10	1,10	1,10	1,10	1,10	1,10	1,10	1,10	
	0,55	1,20	1,20	1,20	1,20	1,20	1,20	1,20	1,20	1,20	1,20	1,20	1,20	
	0,60	1,26	1,26	1,26	1,26	1,26	1,26	1,26	1,26	1,26	1,26	1,26	1,26	
	0,63	1,30	1,30	1,30	1,30	1,30	1,30	1,30	1,30	1,30	1,30	1,30	1,30	
	0,75	1,30	1,30	1,30	1,30	1,30	1,30	1,30	1,30	1,30	1,30	1,30	1,30	
	0,88	1,30	1,30	1,30	1,30	1,30	1,30	1,30	1,30	1,30	1,30	1,30	1,30	
	1,00	1,30	1,30	1,30	1,30	1,30	1,30	1,30	1,30	1,30	1,30	1,30	1,30	
$N_{R,k}$ [kN] for t_{N1} =	0,40	1,86*	1,86*	1,86*	1,86*	1,86*	1,86*	1,86*	1,86*	1,86*	1,86*	1,86*	1,86*	$N_{R,k,I}$ [kN] =
	0,50	2,02*	2,02*	2,02*	2,02*	2,02*	2,02*	2,02*	2,02*	2,02*	2,02*	2,02*	2,02*	
	0,55	2,45*	2,45*	2,45*	2,45*	2,45*	2,45*	2,45*	2,45*	2,45*	2,45*	2,45*	2,45*	
	0,60	2,89	2,89*	2,89*	2,89*	2,89*	2,89*	2,89*	2,89*	2,89*	2,89*	2,89*	2,89*	
	0,63	3,04	3,15	3,15*	3,15*	3,15*	3,15*	3,15*	3,15*	3,15*	3,15*	3,15*	3,15*	
	0,75	3,04	3,25	3,40	3,40	3,40*	3,40*	3,40*	3,40*	3,40*	3,40*	3,40*	3,40*	
	0,88	3,04	3,25	3,45	3,66	3,87	4,08	4,10	4,10*	4,10*	4,10*	4,10*	4,10*	
	1,00	3,04	3,25	3,45	3,66	3,87	4,08	4,28	4,49	4,70	4,90	4,90	4,90*	
max u [mm] for D_F =	30	4,0	4,0	4,0	4,0	4,0	4,0	4,0	4,0	4,0	4,0	4,0	4,0	max u [mm] for D_F =
	40	5,5	5,5	5,5	5,5	5,5	5,5	5,5	5,5	5,5	5,5	5,5	5,5	
	60	9,0	9,0	9,0	9,0	9,0	9,0	9,0	9,0	9,0	9,0	9,0	9,0	
	80	13,5	13,5	13,5	13,5	13,5	13,5	13,5	13,5	13,5	13,5	13,5	13,5	
	100	18,0	18,0	18,0	18,0	18,0	18,0	18,0	18,0	18,0	18,0	18,0	18,0	
	120	18,0	18,0	18,0	18,0	18,0	18,0	18,0	18,0	18,0	18,0	18,0	18,0	
	≥ 140	18,0	18,0	18,0	18,0	18,0	18,0	18,0	18,0	18,0	18,0	18,0	18,0	

- The values indicated above, depending on the screw depth l_g shall apply to k_{mod} =0,90 and the timber strength class C24 (ρ_k = 350 kg/m³). For other values of k_{mod} and strength classes see chapter 4.2.2.
- For t_{N2} made of S320GD or S350GD the indicated values $V_{R,k}$ can be increased by 8,3%.
- For t_{N1} made of S320GD or S350GD the values $N_{R,k}$ marked with * can be increased by 8,3%.

Fastening screws for sandwich panels

Self-drilling screw JT3-D-(FR-)2H-6,5/7,0xL, JT6-D-(FR-)2H-6,5/7,0xL
with hexagon head or round head with Torx® drive system and sealing washer ≥ Ø19 mm

Annex 36

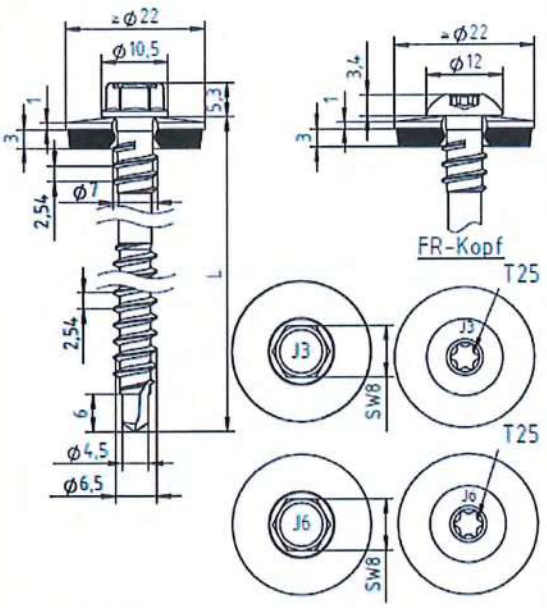

Materials

Fastener: stainless steel (A2) – EN ISO 3506
stainless steel (A4) – EN ISO 3506

Washer: stainless steel (A2/A4) – EN ISO 3506
with vulcanised EPDM seal

Componentl I: S280GD to S350GD – EN 10346

Component II: timber– EN 14081

Drilling capacity: $t_{N2} \leq 2{,}00$ mm

Timber substructures:

performance determined with
$M_{y,Rk}$ = 9,742 Nm
$f_{ax,k}$ = 11,810 N/mm² for $l_{ef} \geq 44$ mm

l_g [mm]		50	53	56	59	62	65	68	71	74	77	80		
$V_{R,k}$ [kN] for t_{N2} =	0,40	1,03	1,03	1,03	1,03	1,03	1,03	1,03	1,03	1,03	1,03	1,03	1,03	$V_{R,k,I}$ [kN]
	0,50	1,10	1,10	1,10	1,10	1,10	1,10	1,10	1,10	1,10	1,10	1,10	1,10	
	0,55	1,20	1,20	1,20	1,20	1,20	1,20	1,20	1,20	1,20	1,20	1,20	1,20	
	0,60	1,26	1,26	1,26	1,26	1,26	1,26	1,26	1,26	1,26	1,26	1,26	1,26	
	0,63	1,30	1,30	1,30	1,30	1,30	1,30	1,30	1,30	1,30	1,30	1,30	1,30	
	0,75	1,30	1,30	1,30	1,30	1,30	1,30	1,30	1,30	1,30	1,30	1,30	1,30	
	0,88	1,30	1,30	1,30	1,30	1,30	1,30	1,30	1,30	1,30	1,30	1,30	1,30	
	1,00	1,30	1,30	1,30	1,30	1,30	1,30	1,30	1,30	1,30	1,30	1,30	1,30	
$N_{R,k}$ [kN] for t_{N1} =	0,40	2,16*	2,16*	2,16*	2,16*	2,16*	2,16*	2,16*	2,16*	2,16*	2,16*	2,16*	2,16*	$N_{R,k,I}$ [kN] =
	0,50	2,28*	2,28*	2,28*	2,28*	2,28*	2,28*	2,28*	2,28*	2,28*	2,28*	2,28*	2,28*	
	0,55	2,71*	2,71*	2,71*	2,71*	2,71*	2,71*	2,71*	2,71*	2,71*	2,71*	2,71*	2,71*	
	0,60	3,04	3,14	3,14*	3,14*	3,14*	3,14*	3,14*	3,14*	3,14*	3,14*	3,14*	3,14*	
	0,63	3,04	3,25	3,40	3,40	3,40*	3,40*	3,40*	3,40*	3,40*	3,40*	3,40*	3,40*	
	0,75	3,04	3,25	3,40	3,40	3,40*	3,40*	3,40*	3,40*	3,40*	3,40*	3,40*	3,40*	
	0,88	3,04	3,25	3,45	3,66	3,87	4,08	4,10	4,10*	4,10*	4,10*	4,10*	4,10*	
	1,00	3,04	3,25	3,45	3,66	3,87	4,08	4,28	4,49	4,70	4,90	4,90	4,90	
max u [mm] for D_F =	30	4,0	4,0	4,0	4,0	4,0	4,0	4,0	4,0	4,0	4,0	4,0	4,0	max u [mm] for D_F =
	40	5,5	5,5	5,5	5,5	5,5	5,5	5,5	5,5	5,5	5,5	5,5	5,5	
	60	9,0	9,0	9,0	9,0	9,0	9,0	9,0	9,0	9,0	9,0	9,0	9,0	
	80	13,5	13,5	13,5	13,5	13,5	13,5	13,5	13,5	13,5	13,5	13,5	13,5	
	100	18,0	18,0	18,0	18,0	18,0	18,0	18,0	18,0	18,0	18,0	18,0	18,0	
	120	18,0	18,0	18,0	18,0	18,0	18,0	18,0	18,0	18,0	18,0	18,0	18,0	
	≥ 140	18,0	18,0	18,0	18,0	18,0	18,0	18,0	18,0	18,0	18,0	18,0	18,0	

- The values indicated above, depending on the screw depth l_g shall apply to k_{mod} =0,90 and the timber strength class C24 (ρ_k = 350 kg/m³). For other values of k_{mod} and strength classes see chapter 4.2.2.
- For t_{N2} made of S320GD or S350GD the indicated values $V_{R,k}$ can be increased by 8,3%.
- For t_{N1} made of S320GD or S350GD the values $N_{R,k}$ marked with * can be increased by 8,3%.

Fastening screws for sandwich panels

Self-drilling screw JT3-D-(FR-)2H-6,5/7,0xL, JT6-D-(FR-)2H-6,5/7,0xL
with hexagon head or round head with Torx® drive system and sealing washer ≥ Ø22 mm

Annex 37

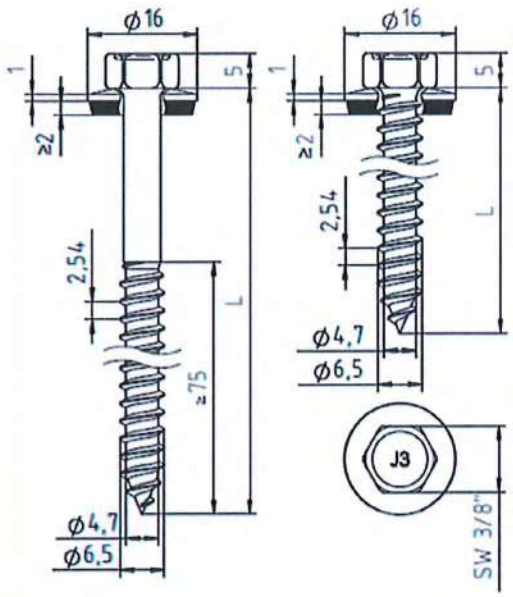

Materials

Fastener: stainless steel (A2) – EN ISO 3506
stainless steel (A4) – EN ISO 3506

Washer: stainless steel (A2/A4) – EN ISO 3506
with vulcanised EPDM seal

Componentl I: S280GD to S320GD – EN 10346

Component II: timber– EN 14081

Pre-drill diameter: 4,50 mm

Timber substructures:

performance determined with
$M_{y,Rk}$ = 9,742 Nm
$f_{ax,k}$ = 11,080 N/mm² for l_{ef} ≥ 50 mm

	l_g [mm]	50	53	55	58	60	63	65	68	70	73	75		
$V_{R,k}$ [kN] for t_{N2} =	0,40	1,03	1,03	1,03	1,03	1,03	1,03	1,03	1,03	1,03	1,03	1,03	1,03	$V_{R,k,I}$ [kN]
	0,50	1,10	1,10	1,10	1,10	1,10	1,10	1,10	1,10	1,10	1,10	1,10	1,10	
	0,55	1,20	1,20	1,20	1,20	1,20	1,20	1,20	1,20	1,20	1,20	1,20	1,20	
	0,60	1,26	1,26	1,26	1,26	1,26	1,26	1,26	1,26	1,26	1,26	1,26	1,26	
	0,63	1,30	1,30	1,30	1,30	1,30	1,30	1,30	1,30	1,30	1,30	1,30	1,30	
	0,75	1,30	1,30	1,30	1,30	1,30	1,30	1,30	1,30	1,30	1,30	1,30	1,30	
	0,88	1,30	1,30	1,30	1,30	1,30	1,30	1,30	1,30	1,30	1,30	1,30	1,30	
	1,00	1,30	1,30	1,30	1,30	1,30	1,30	1,30	1,30	1,30	1,30	1,30	1,30	
$N_{R,k}$ [kN] for t_{N1} =	0,40	1,24*	1,24*	1,24*	1,24*	1,24*	1,24*	1,24*	1,24*	1,24*	1,24*	1,24*	1,24*	$N_{R,k,I}$ [kN] =
	0,50	1,90*	1,90*	1,90*	1,90*	1,90*	1,90*	1,90*	1,90*	1,90*	1,90*	1,90*	1,90*	
	0,55	2,30*	2,30*	2,30*	2,30*	2,30*	2,30*	2,30*	2,30*	2,30*	2,30*	2,30*	2,30*	
	0,60	2,61*	2,61*	2,61*	2,61*	2,61*	2,61*	2,61*	2,61*	2,61*	2,61*	2,61*	2,61*	
	0,63	2,80*	2,80*	2,80*	2,80*	2,80*	2,80*	2,80*	2,80*	2,80*	2,80*	2,80*	2,80*	
	0,75	3,24	3,40	3,56	3,60	3,60	3,60*	3,60*	3,60*	3,60*	3,60*	3,60*	3,60*	
	0,88	3,24	3,40	3,56	3,73	3,80	3,80	3,80*	3,80*	3,80*	3,80*	3,80*	3,80*	
	1,00	3,24	3,40	3,56	3,73	3,89	4,00	4,00	4,00*	4,00*	4,00*	4,00*	4,00*	
max u [mm] for D_F =	30	4,0	4,0	4,0	4,0	4,0	4,0	4,0	4,0	4,0	4,0	4,0	4,0	max u [mm] for D_F =
	40	6,0	6,0	6,0	6,0	6,0	6,0	6,0	6,0	6,0	6,0	6,0	6,0	
	60	10,0	10,0	10,0	10,0	10,0	10,0	10,0	10,0	10,0	10,0	10,0	10,0	
	80	15,0	15,0	15,0	15,0	15,0	15,0	15,0	15,0	15,0	15,0	15,0	15,0	
	100	20,0	20,0	20,0	20,0	20,0	20,0	20,0	20,0	20,0	20,0	20,0	20,0	
	120	20,0	20,0	20,0	20,0	20,0	20,0	20,0	20,0	20,0	20,0	20,0	20,0	
	≥ 140	20,0	20,0	20,0	20,0	20,0	20,0	20,0	20,0	20,0	20,0	20,0	20,0	

- The values indicated above, depending on the screw depth l_g shall apply to k_{mod} =0,90 and the timber strength class C24 (ρ_k = 350 kg/m³). For other values of k_{mod} and strength classes see chapter 4.2.2.
- For t_{N2} made of S320GD or S350GD the indicated values $V_{R,k}$ can be increased by 8,3%.
- For t_{N1} made of S320GD or S350GD the values $N_{R,k}$ marked with * can be increased by 8,3%.

Fastening screws for sandwich panels

Self-tapping screw JA3-6,5xL
with hexagon head and sealing washer Ø16 mm

Annex 38

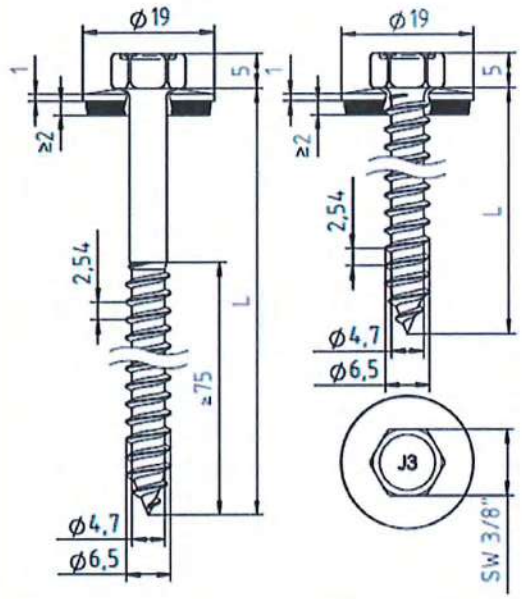

Materials

Fastener: stainless steel (A2) – EN ISO 3506
stainless steel (A4) – EN ISO 3506

Washer: stainless steel (A2/A4) – EN ISO 3506
with vulcanised EPDM seal

Componentl I: S280GD to S320GD – EN 10346

Component II: timber– EN 14081

Pre-drill diameter: 4,50 mm

Timber substructures:

performance determined with
$M_{y,Rk}$ = 9,742 Nm
$f_{ax,k}$ = 11,080 N/mm² for l_{ef} ≥ 50 mm

	l_g [mm]	50	53	55	58	60	63	65	68	70	73	75		
$V_{R,k}$ [kN] for t_{N2} =	0,40	1,03	1,03	1,03	1,03	1,03	1,03	1,03	1,03	1,03	1,03	1,03	1,03	$V_{R,k,I}$ [kN]
	0,50	1,10	1,10	1,10	1,10	1,10	1,10	1,10	1,10	1,10	1,10	1,10	1,10	
	0,55	1,20	1,20	1,20	1,20	1,20	1,20	1,20	1,20	1,20	1,20	1,20	1,20	
	0,60	1,26	1,26	1,26	1,26	1,26	1,26	1,26	1,26	1,26	1,26	1,26	1,26	
	0,63	1,30	1,30	1,30	1,30	1,30	1,30	1,30	1,30	1,30	1,30	1,30	1,30	
	0,75	1,30	1,30	1,30	1,30	1,30	1,30	1,30	1,30	1,30	1,30	1,30	1,30	
	0,88	1,30	1,30	1,30	1,30	1,30	1,30	1,30	1,30	1,30	1,30	1,30	1,30	
	1,00	1,30	1,30	1,30	1,30	1,30	1,30	1,30	1,30	1,30	1,30	1,30	1,30	
$N_{R,k}$ [kN] for t_{N1} =	0,40	1,48*	1,48*	1,48*	1,48*	1,48*	1,48*	1,48*	1,48*	1,48*	1,48*	1,48*	1,48*	$N_{R,k,I}$ [kN] =
	0,50	1,90*	1,90*	1,90*	1,90*	1,90*	1,90*	1,90*	1,90*	1,90*	1,90*	1,90*	1,90*	
	0,55	2,33*	2,33*	2,33*	2,33*	2,33*	2,33*	2,33*	2,33*	2,33*	2,33*	2,33*	2,33*	
	0,60	2,77*	2,77*	2,77*	2,77*	2,77*	2,77*	2,77*	2,77*	2,77*	2,77*	2,77*	2,77*	
	0,63	3,03	3,03*	3,03*	3,03*	3,03*	3,03*	3,03*	3,03*	3,03*	3,03*	3,03*	3,03*	
	0,75	3,24	3,40	3,56	3,60	3,60	3,60*	3,60*	3,60*	3,60*	3,60*	3,60*	3,60*	
	0,88	3,24	3,40	3,56	3,73	3,80	3,80	3,80*	3,80*	3,80*	3,80*	3,80*	3,80*	
	1,00	3,24	3,40	3,56	3,73	3,89	4,00	4,00	4,00*	4,00*	4,00*	4,00*	4,00*	
max u [mm] for D_F =	30	4,0	4,0	4,0	4,0	4,0	4,0	4,0	4,0	4,0	4,0	4,0	4,0	max u [mm] for D_F =
	40	6,0	6,0	6,0	6,0	6,0	6,0	6,0	6,0	6,0	6,0	6,0	6,0	
	60	10,0	10,0	10,0	10,0	10,0	10,0	10,0	10,0	10,0	10,0	10,0	10,0	
	80	15,0	15,0	15,0	15,0	15,0	15,0	15,0	15,0	15,0	15,0	15,0	15,0	
	100	20,0	20,0	20,0	20,0	20,0	20,0	20,0	20,0	20,0	20,0	20,0	20,0	
	120	20,0	20,0	20,0	20,0	20,0	20,0	20,0	20,0	20,0	20,0	20,0	20,0	
	≥ 140	20,0	20,0	20,0	20,0	20,0	20,0	20,0	20,0	20,0	20,0	20,0	20,0	

- The values indicated above, depending on the screw depth l_g shall apply to k_{mod} =0,90 and the timber strength class C24 (ρ_k = 350 kg/m³). For other values of k_{mod} and strength classes see chapter 4.2.2.
- For t_{N2} made of S320GD or S350GD the indicated values $V_{R,k}$ can be increased by 8,3%.
- For t_{N1} made of S320GD or S350GD the values $N_{R,k}$ marked with * can be increased by 8,3%.

Fastening screws for sandwich panels

Self-tapping screw JA3-6,5xL
with hexagon head and sealing washer Ø19 mm

Annex 39

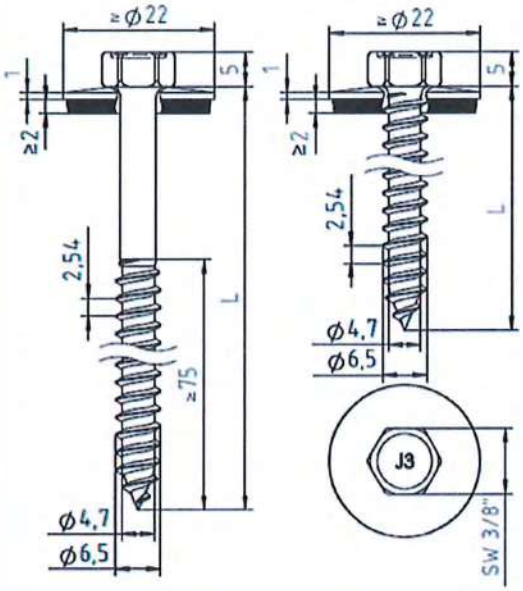

Materials

Fastener: stainless steel (A2) – EN ISO 3506
stainless steel (A4) – EN ISO 3506

Washer: stainless steel (A2/A4) – EN ISO 3506
with vulcanised EPDM seal

Componentl I: S280GD to S320GD – EN 10346

Component II: timber– EN 14081

Pre-drill diameter: 4,50 mm

Timber substructures:

performance determined with
$M_{y,Rk}$ = 9,742 Nm
$f_{ax,k}$ = 11,080 N/mm² for l_{ef} ≥ 50 mm

	l_g [mm]	50	53	55	58	60	63	65	68	70	73	75		
$V_{R,k}$ [kN] for t_{N2} =	0,40	1,03	1,03	1,03	1,03	1,03	1,03	1,03	1,03	1,03	1,03	1,03	1,03	$V_{R,k,I}$ [kN]
	0,50	1,10	1,10	1,10	1,10	1,10	1,10	1,10	1,10	1,10	1,10	1,10	1,10	
	0,55	1,20	1,20	1,20	1,20	1,20	1,20	1,20	1,20	1,20	1,20	1,20	1,20	
	0,60	1,26	1,26	1,26	1,26	1,26	1,26	1,26	1,26	1,26	1,26	1,26	1,26	
	0,63	1,30	1,30	1,30	1,30	1,30	1,30	1,30	1,30	1,30	1,30	1,30	1,30	
	0,75	1,30	1,30	1,30	1,30	1,30	1,30	1,30	1,30	1,30	1,30	1,30	1,30	
	0,88	1,30	1,30	1,30	1,30	1,30	1,30	1,30	1,30	1,30	1,30	1,30	1,30	
	1,00	1,30	1,30	1,30	1,30	1,30	1,30	1,30	1,30	1,30	1,30	1,30	1,30	
$N_{R,k}$ [kN] for t_{N1} =	0,40	1,72*	1,72*	1,72*	1,72*	1,72*	1,72*	1,72*	1,72*	1,72*	1,72*	1,72*	1,72*	$N_{R,k,I}$ [kN] =
	0,50	2,21*	2,21*	2,21*	2,21*	2,21*	2,21*	2,21*	2,21*	2,21*	2,21*	2,21*	2,21*	
	0,55	2,77*	2,77*	2,77*	2,77*	2,77*	2,77*	2,77*	2,77*	2,77*	2,77*	2,77*	2,77*	
	0,60	3,24	3,33	3,33	3,33*	3,33*	3,33*	3,33*	3,33*	3,33*	3,33*	3,33*	3,33*	
	0,63	3,24	3,40	3,56	3,67	3,67	3,67*	3,67*	3,67*	3,67*	3,67*	3,67*	3,67*	
	0,75	3,24	3,40	3,56	3,67	3,67	3,67*	3,67*	3,67*	3,67*	3,67*	3,67*	3,67*	
	0,88	3,24	3,40	3,56	3,73	3,80	3,80	3,80*	3,80*	3,80*	3,80*	3,80*	3,80*	
	1,00	3,24	3,40	3,56	3,73	3,89	4,00	4,00	4,00*	4,00*	4,00*	4,00*	4,00*	
max u [mm] for D_F =	30	4,0	4,0	4,0	4,0	4,0	4,0	4,0	4,0	4,0	4,0	4,0	4,0	max u [mm] for D_F =
	40	6,0	6,0	6,0	6,0	6,0	6,0	6,0	6,0	6,0	6,0	6,0	6,0	
	60	10,0	10,0	10,0	10,0	10,0	10,0	10,0	10,0	10,0	10,0	10,0	10,0	
	80	15,0	15,0	15,0	15,0	15,0	15,0	15,0	15,0	15,0	15,0	15,0	15,0	
	100	20,0	20,0	20,0	20,0	20,0	20,0	20,0	20,0	20,0	20,0	20,0	20,0	
	120	20,0	20,0	20,0	20,0	20,0	20,0	20,0	20,0	20,0	20,0	20,0	20,0	
	≥ 140	20,0	20,0	20,0	20,0	20,0	20,0	20,0	20,0	20,0	20,0	20,0	20,0	

- The values indicated above, depending on the screw depth l_g shall apply to k_{mod} =0,90 and the timber strength class C24 (ρ_k = 350 kg/m³). For other values of k_{mod} and strength classes see chapter 4.2.2.
- For t_{N2} made of S320GD or S350GD the indicated values $V_{R,k}$ can be increased by 8,3%.
- For t_{N1} made of S320GD or S350GD the values $N_{R,k}$ marked with * can be increased by 8,3%.

Fastening screws for sandwich panels

Self-tapping screw JA3-6,5xL
with hexagon head and sealing washer ≥ Ø22 mm

Anhang 40

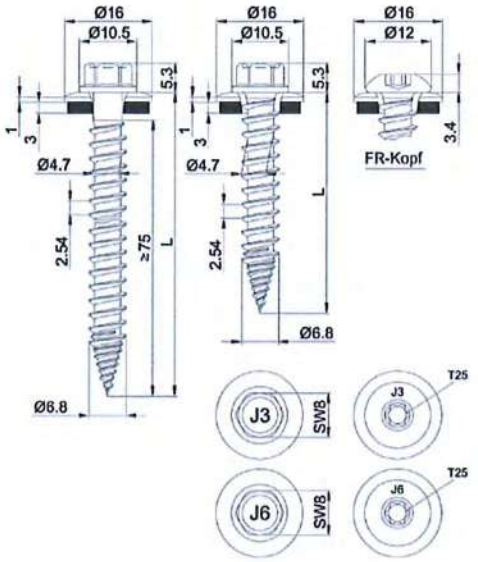

Materials

Fastener: stainless steel (A2) – EN ISO 3506
stainless steel (A4) – EN ISO 3506

Washer: stainless steel (A2/A4) – EN ISO 3506
with vulcanised EPDM seal

Componentl I: S280GD to S350GD – EN 10346

Component II: timber– EN 14081

Drilling capacity: $t_{N2} \leq 1{,}00$ mm

Timber substructures:

performance determined with
$M_{y,Rk}$ = 10,744 Nm
$f_{ax,k}$ = 11,080 N/mm² for $l_{ef} \geq 34$ mm

l_g [mm]		45	48	51	54	57	60	63	66	69	72	75		
$V_{R,k}$ [kN] for t_{N2} =	0,40	1,03	1,03	1,03	1,03	1,03	1,03	1,03	1,03	1,03	1,03	1,03	1,03	$V_{R,k,I}$ [kN]
	0,50	1,10	1,10	1,10	1,10	1,10	1,10	1,10	1,10	1,10	1,10	1,10	1,10	
	0,55	1,20	1,20	1,20	1,20	1,20	1,20	1,20	1,20	1,20	1,20	1,20	1,20	
	0,60	1,26	1,26	1,26	1,26	1,26	1,26	1,26	1,26	1,26	1,26	1,26	1,26	
	0,63	1,30	1,30	1,30	1,30	1,30	1,30	1,30	1,30	1,30	1,30	1,30	1,30	
	0,75	1,30	1,30	1,30	1,30	1,30	1,30	1,30	1,30	1,30	1,30	1,30	1,30	
	0,88	1,30	1,30	1,30	1,30	1,30	1,30	1,30	1,30	1,30	1,30	1,30	1,30	
	1,00	1,30	1,30	1,30	1,30	1,30	1,30	1,30	1,30	1,30	1,30	1,30	1,30	
$N_{R,k}$ [kN] for t_{N1} =	0,40	1,38*	1,38*	1,38*	1,38*	1,38*	1,38*	1,38*	1,38*	1,38*	1,38*	1,38*	1,38*	$N_{R,k,I}$ [kN] =
	0,50	1,77*	1,77*	1,77*	1,77*	1,77*	1,77*	1,77*	1,77*	1,77*	1,77*	1,77*	1,77*	
	0,55	1,96*	1,96*	1,96*	1,96*	1,96*	1,96*	1,96*	1,96*	1,96*	1,96*	1,96*	1,96*	
	0,60	2,15	2,15*	2,15*	2,15*	2,15*	2,15*	2,15*	2,15*	2,15*	2,15*	2,15*	2,15*	
	0,63	2,27	2,27*	2,27*	2,27*	2,27*	2,27*	2,27*	2,27*	2,27*	2,27*	2,27*	2,27*	
	0,75	2,31	2,51	2,71	2,73	2,73*	2,73*	2,73*	2,73*	2,73*	2,73*	2,73*	2,73*	
	0,88	2,31	2,51	2,71	2,92	3,12	3,23	3,23*	3,23*	3,23*	3,23*	3,23*	3,23*	
	1,00	2,31	2,51	2,71	2,92	3,12	3,32	3,53	3,69	3,69	3,69*	3,69*	3,69*	
max u [mm] for D_F =	30	4,0	4,0	4,0	4,0	4,0	4,0	4,0	4,0	4,0	4,0	4,0	4,0	max u [mm] for D_F =
	40	6,0	6,0	6,0	6,0	6,0	6,0	6,0	6,0	6,0	6,0	6,0	6,0	
	60	10,0	10,0	10,0	10,0	10,0	10,0	10,0	10,0	10,0	10,0	10,0	10,0	
	80	15,0	15,0	15,0	15,0	15,0	15,0	15,0	15,0	15,0	15,0	15,0	15,0	
	100	20,0	20,0	20,0	20,0	20,0	20,0	20,0	20,0	20,0	20,0	20,0	20,0	
	120	20,0	20,0	20,0	20,0	20,0	20,0	20,0	20,0	20,0	20,0	20,0	20,0	
	≥ 140	20,0	20,0	20,0	20,0	20,0	20,0	20,0	20,0	20,0	20,0	20,0	20,0	

- The values indicated above, depending on the screw depth l_g shall apply to k_{mod} =0,90 and the timber strength class C24 (ρ_k = 350 kg/m³). For other values of k_{mod} and strength classes see chapter 4.2.2.
- For t_{N2} made of S320GD or S350GD the indicated values $V_{R,k}$ can be increased by 8,3%.
- For t_{N1} made of S320GD or S350GD the values $N_{R,k}$ marked with * can be increased by 8,3%.

Fastening screws for sandwich panels

Self-drilling screw (chipless) JF3-(FR-)6,8xL, JF6-(FR-)6,8xL
with hexagon head or round head with Torx® drive system and sealing washer Ø16 mm

Annex 41

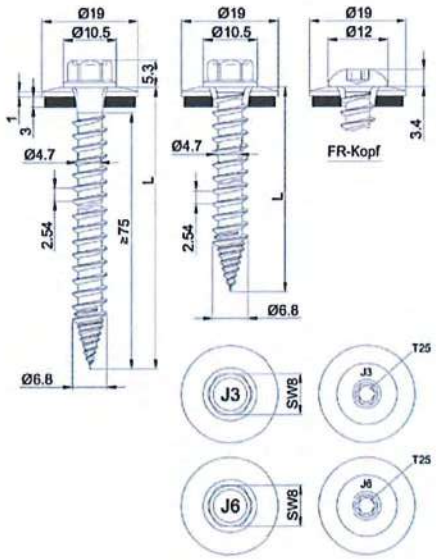

Materials

Fastener: stainless steel (A2) – EN ISO 3506
stainless steel (A4) – EN ISO 3506

Washer: stainless steel (A2/A4) – EN ISO 3506
with vulcanised EPDM seal

Componentl I: S280GD to S350GD – EN 10346

Component II: timber– EN 14081

Drilling capacity: $t_{N2} \leq 1{,}00$ mm

Timber substructures:

performance determined with
$M_{y,Rk}$ = 10,744 Nm
$f_{ax,k}$ = 11,080 N/mm² for $l_{ef} \geq 34$ mm

	l_g [mm]	45	48	51	54	57	60	63	66	69	72	75		
$V_{R,k}$ [kN] for t_{N2} =	0,40	1,03	1,03	1,03	1,03	1,03	1,03	1,03	1,03	1,03	1,03	1,03	1,03	$V_{R,k,I}$ [kN]
	0,50	1,10	1,10	1,10	1,10	1,10	1,10	1,10	1,10	1,10	1,10	1,10	1,10	
	0,55	1,20	1,20	1,20	1,20	1,20	1,20	1,20	1,20	1,20	1,20	1,20	1,20	
	0,60	1,26	1,26	1,26	1,26	1,26	1,26	1,26	1,26	1,26	1,26	1,26	1,26	
	0,63	1,30	1,30	1,30	1,30	1,30	1,30	1,30	1,30	1,30	1,30	1,30	1,30	
	0,75	1,30	1,30	1,30	1,30	1,30	1,30	1,30	1,30	1,30	1,30	1,30	1,30	
	0,88	1,30	1,30	1,30	1,30	1,30	1,30	1,30	1,30	1,30	1,30	1,30	1,30	
	1,00	1,30	1,30	1,30	1,30	1,30	1,30	1,30	1,30	1,30	1,30	1,30	1,30	
$N_{R,k}$ [kN] for t_{N1} =	0,40	1,64*	1,64*	1,64*	1,64*	1,64*	1,64*	1,64*	1,64*	1,64*	1,64*	1,64*	1,64*	$N_{R,k,I}$ [kN] =
	0,50	1,90*	1,90*	1,90*	1,90*	1,90*	1,90*	1,90*	1,90*	1,90*	1,90*	1,90*	1,90*	
	0,55	2,31	2,33	2,33*	2,33*	2,33*	2,33*	2,33*	2,33*	2,33*	2,33*	2,33*	2,33*	
	0,60	2,31	2,51	2,71	2,77	2,77*	2,77*	2,77*	2,77*	2,77*	2,77*	2,77*	2,77*	
	0,63	2,31	2,51	2,71	2,92	3,03	3,03*	3,03*	3,03*	3,03*	3,03*	3,03*	3,03*	
	0,75	2,31	2,51	2,71	2,92	3,03	3,03*	3,03*	3,03*	3,03*	3,03*	3,03*	3,03*	
	0,88	2,31	2,51	2,71	2,92	3,12	3,23	3,23*	3,23*	3,23*	3,23*	3,23*	3,23*	
	1,00	2,31	2,51	2,71	2,92	3,12	3,32	3,53	3,69	3,69	3,69*	3,69*	3,69*	
max u [mm] for D_F =	30	4,0	4,0	4,0	4,0	4,0	4,0	4,0	4,0	4,0	4,0	4,0	4,0	max u [mm] for D_F =
	40	6,0	6,0	6,0	6,0	6,0	6,0	6,0	6,0	6,0	6,0	6,0	6,0	
	60	10,0	10,0	10,0	10,0	10,0	10,0	10,0	10,0	10,0	10,0	10,0	10,0	
	80	15,0	15,0	15,0	15,0	15,0	15,0	15,0	15,0	15,0	15,0	15,0	15,0	
	100	20,0	20,0	20,0	20,0	20,0	20,0	20,0	20,0	20,0	20,0	20,0	20,0	
	120	20,0	20,0	20,0	20,0	20,0	20,0	20,0	20,0	20,0	20,0	20,0	20,0	
	≥ 140	20,0	20,0	20,0	20,0	20,0	20,0	20,0	20,0	20,0	20,0	20,0	20,0	

- The values indicated above, depending on the screw depth l_g shall apply to k_{mod} =0,90 and the timber strength class C24 (ρ_k = 350 kg/m³). For other values of k_{mod} and strength classes see chapter 4.2.2.
- For t_{N2} made of S320GD or S350GD the indicated values $V_{R,k}$ can be increased by 8,3%.
- For t_{N1} made of S320GD or S350GD the values $N_{R,k}$ marked with * can be increased by 8,3%.

Fastening screws for sandwich panels

Self-drilling screw (chipless) JF3-(FR-)6,8xL, JF6-(FR-)6,8xL
with hexagon head or round head with Torx® drive system and sealing washer ≥ Ø19 mm

Annex 42

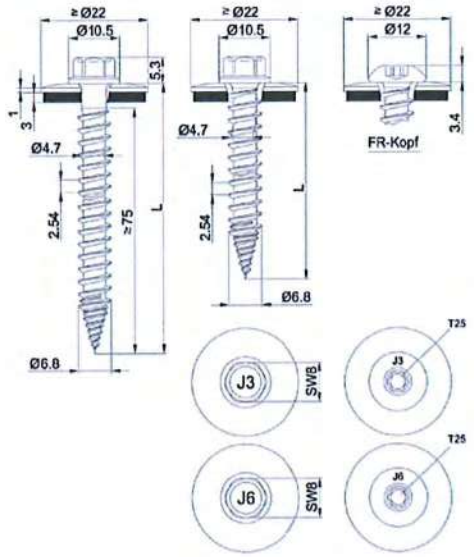

Materials

Fastener: stainless steel (A2) – EN ISO 3506
stainless steel (A4) – EN ISO 3506

Washer: stainless steel (A2/A4) – EN ISO 3506
with vulcanised EPDM seal

Componentl I: S280GD to S350GD – EN 10346

Component II: timber– EN 14081

Drilling capacity: $t_{N2} \leq 1{,}00$ mm

Timber substructures:

performance determined with
$M_{y,Rk}$ = 10,744 Nm
$f_{ax,k}$ = 11,080 N/mm² for $l_{ef} \geq 34$ mm

	l_g [mm]	45	48	51	54	57	60	63	66	69	72	75		
$V_{R,k}$ [kN] for t_{N2} =	0,40	1,03	1,03	1,03	1,03	1,03	1,03	1,03	1,03	1,03	1,03	1,03	1,03	$V_{R,k,I}$ [kN]
	0,50	1,10	1,10	1,10	1,10	1,10	1,10	1,10	1,10	1,10	1,10	1,10	1,10	
	0,55	1,20	1,20	1,20	1,20	1,20	1,20	1,20	1,20	1,20	1,20	1,20	1,20	
	0,60	1,26	1,26	1,26	1,26	1,26	1,26	1,26	1,26	1,26	1,26	1,26	1,26	
	0,63	1,30	1,30	1,30	1,30	1,30	1,30	1,30	1,30	1,30	1,30	1,30	1,30	
	0,75	1,30	1,30	1,30	1,30	1,30	1,30	1,30	1,30	1,30	1,30	1,30	1,30	
	0,88	1,30	1,30	1,30	1,30	1,30	1,30	1,30	1,30	1,30	1,30	1,30	1,30	
	1,00	1,30	1,30	1,30	1,30	1,30	1,30	1,30	1,30	1,30	1,30	1,30	1,30	
$N_{R,k}$ [kN] for t_{N1} =	0,40	1,90*	1,90*	1,90*	1,90*	1,90*	1,90*	1,90*	1,90*	1,90*	1,90*	1,90*	1,90*	$N_{R,k,I}$ [kN] =
	0,50	2,21	2,21*	2,21*	2,21*	2,21*	2,21*	2,21*	2,21*	2,21*	2,21*	2,21*	2,21*	
	0,55	2,31	2,51	2,71	2,77	2,77*	2,77*	2,77*	2,77*	2,77*	2,77*	2,77*	2,77*	
	0,60	2,31	2,51	2,71	2,92	3,12	3,32	3,33	3,33*	3,33*	3,33*	3,33*	3,33*	
	0,63	2,31	2,51	2,71	2,92	3,12	3,32	3,53	3,67	3,67	3,67*	3,67*	3,67	
	0,75	2,31	2,51	2,71	2,92	3,12	3,32	3,53	3,67	3,67	3,67*	3,67*	3,67	
	0,88	2,31	2,51	2,71	2,92	3,12	3,32	3,53	3,67	3,67	3,67*	3,67*	3,67	
	1,00	2,31	2,51	2,71	2,92	3,12	3,32	3,53	3,69	3,69	3,69*	3,69*	3,69	
max u [mm] for D_F =	30	4,0	4,0	4,0	4,0	4,0	4,0	4,0	4,0	4,0	4,0	4,0	4,0	max u [mm] for D_F =
	40	6,0	6,0	6,0	6,0	6,0	6,0	6,0	6,0	6,0	6,0	6,0	6,0	
	60	10,0	10,0	10,0	10,0	10,0	10,0	10,0	10,0	10,0	10,0	10,0	10,0	
	80	15,0	15,0	15,0	15,0	15,0	15,0	15,0	15,0	15,0	15,0	15,0	15,0	
	100	20,0	20,0	20,0	20,0	20,0	20,0	20,0	20,0	20,0	20,0	20,0	20,0	
	120	20,0	20,0	20,0	20,0	20,0	20,0	20,0	20,0	20,0	20,0	20,0	20,0	
	≥ 140	20,0	20,0	20,0	20,0	20,0	20,0	20,0	20,0	20,0	20,0	20,0	20,0	

- The values indicated above, depending on the screw depth l_g shall apply to k_{mod} =0,90 and the timber strength class C24 (ρ_k = 350 kg/m³). For other values of k_{mod} and strength classes see chapter 4.2.2.
- For t_{N2} made of S320GD or S350GD the indicated values $V_{R,k}$ can be increased by 8,3%.
- For t_{N1} made of S320GD or S350GD the values $N_{R,k}$ marked with * can be increased by 8,3%.

Fastening screws for sandwich panels

Self-drilling screw (chipless) JF3-(FR-)6,8xL, JF6-(FR-)6,8xL
with hexagon head or round head with Torx® drive system and sealing washer ≥ Ø22 mm

Annex 43