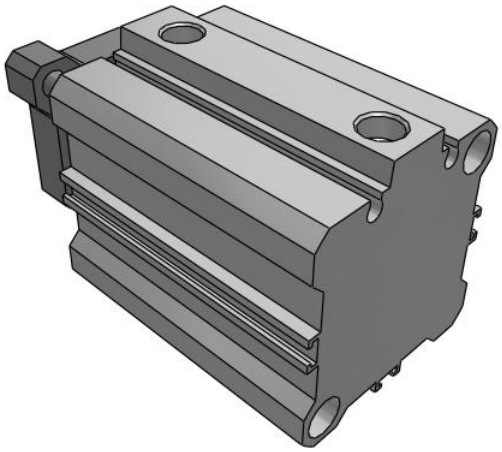

C(D)QM, Compact Cylinder, Guide Rod Type

CDQMB40TF-30

Datasheet

- Guide rod type compact cylinder
- Bore sizes (mm): 12, 16, 20, 25, 32, 40, 50, 63, 80, 100
- Standard strokes (mm): 5 to 100
- 4 times the lateral load resistance of the CQ2K
- Non-rotating accuracy 0.2 or less

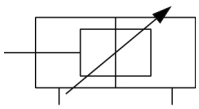

Double-acting cylinder with cushioning adjustable at both ends, single piston rod

Standard specifications

Magnet	D (Built-in)
Mounting	B [Through Hole (Standard)]
Bore Size	Ø40 mm
Port Thread	TF [G]
Stroke	30 mm
Auto Switch	No Switch
Lead Wire or Prewired Connector	0.5 m
Number	2 pcs.
Pressure medium	Compressed air
Maximum temperature of pressure medium with magnet	60 ºC
Minimum temperature of pressure medium with magnet	-10 ºC (with no freezing)
Maximum operating pressure	1.0 MPa
Minimum operating pressure	0.1 MPa
Proof pressure	1.5 MPa
Maximum ambient temperature with magnet	60 ºC
Minimum ambient temperature with magnet	-10 ºC (with no freezing)
Number of pneumatic connections	2 pcs.
Pneumatic input connection	G 1/8
Pneumatic exhaust connection	G 1/8

Specifications are subject to change without prior notice and any obligation on the part of the manufacturer.

SMC CORPORATION +34 945184126 emcmarketing@smc.smces.es

Theoretical cylinder force, advance stroke (at 0.5 MPa)	628
Theoretical cylinder force, return stroke (at 0.5 MPa)	528
Maximum piston speed	500 mm/s
Type of cushioning	Rubber bumper on both ends
Piston rod end	Without thread
Non-rotating accuracy of plate	± 0.1 º
Allowable rotational torque	0.7N·m
Weight	0.473 Kg

Specifications are subject to change without prior notice and any obligation on the part of the manufacturer.

SMC CORPORATION +34 945184126 emcmarketing@smc.smces.es

Dimensions

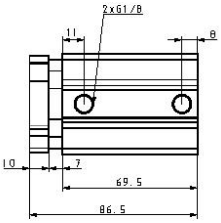

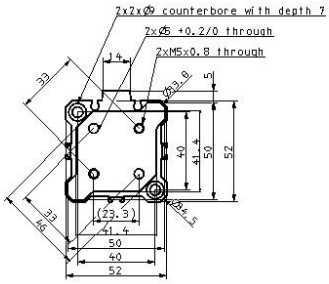

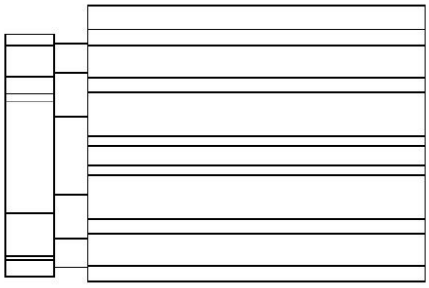

Specifications are subject to change without prior notice and any obligation on the part of the manufacturer.

SMC CORPORATION +34 945184126 emcmarketing@smc.smces.es

Constructions

ø32 to ø40

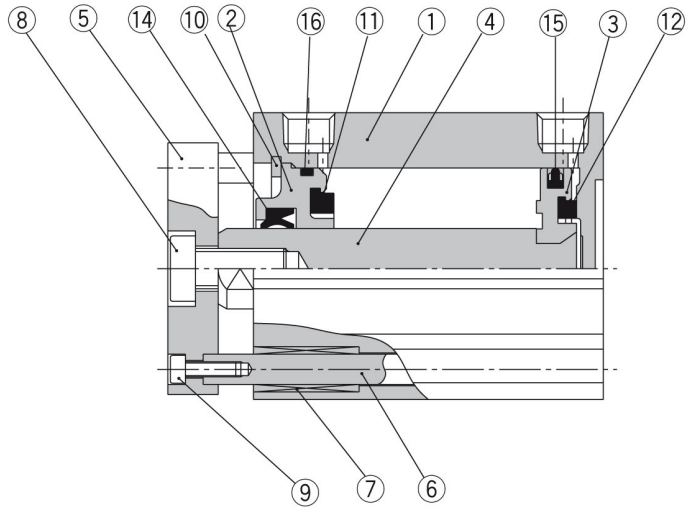

With auto switch (Built-in magnet)

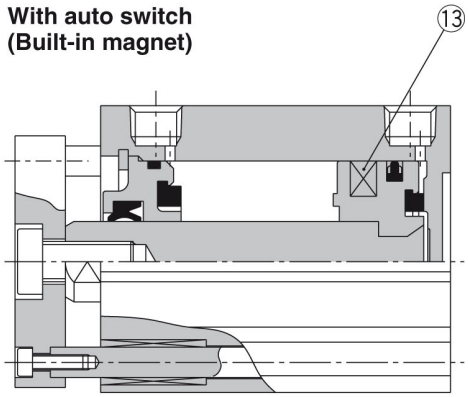

Component Parts

No.	Description	Material	Note
1	**Cylinder tube**	Aluminium alloy	Hard anodised
2	**Collar**	Aluminium alloy	Anodised
3	**Piston**	Aluminium alloy	Chromated
4	**Piston rod**	Carbon steal	Hard chrome plated
5	**Plate**	Aluminium alloy	Anodized
6	**Guide rod**	Stainless steel	Hard chrome plated
7	**Bushing**	Oil-impregnated sintered alloy	
8	**Hexagon socket head cap screw**	Carbon steel	Nickel plated
9	**Hexagon socket head cap screw**	Carbon steel	Nickel plated
10	**Snap ring**	Carbon tool steel	Phosphate coated
11	**Bumper A**	Urethan	
12	**Bumper B**	Urethan	
13	**Magnet**	—	
14	**Rod seal**	NBR	
15	**Piston seal**	NBR	
16	**Gasket**	NBR	

Specifications are subject to change without prior notice and any obligation on the part of the manufacturer.

SMC CORPORATION +34 945184126 emcmarketing@smc.smces.es

Additional information

Catalogue	CQM_EU.pdf
Operation manuals	cqm_op_manual_cqm_-om0001c.pdf

Specifications are subject to change without prior notice and any obligation on the part of the manufacturer.

SMC CORPORATION +34 945184126 emcmarketing@smc.smces.es