Axelent X-Protect

Pedestrian + Impact

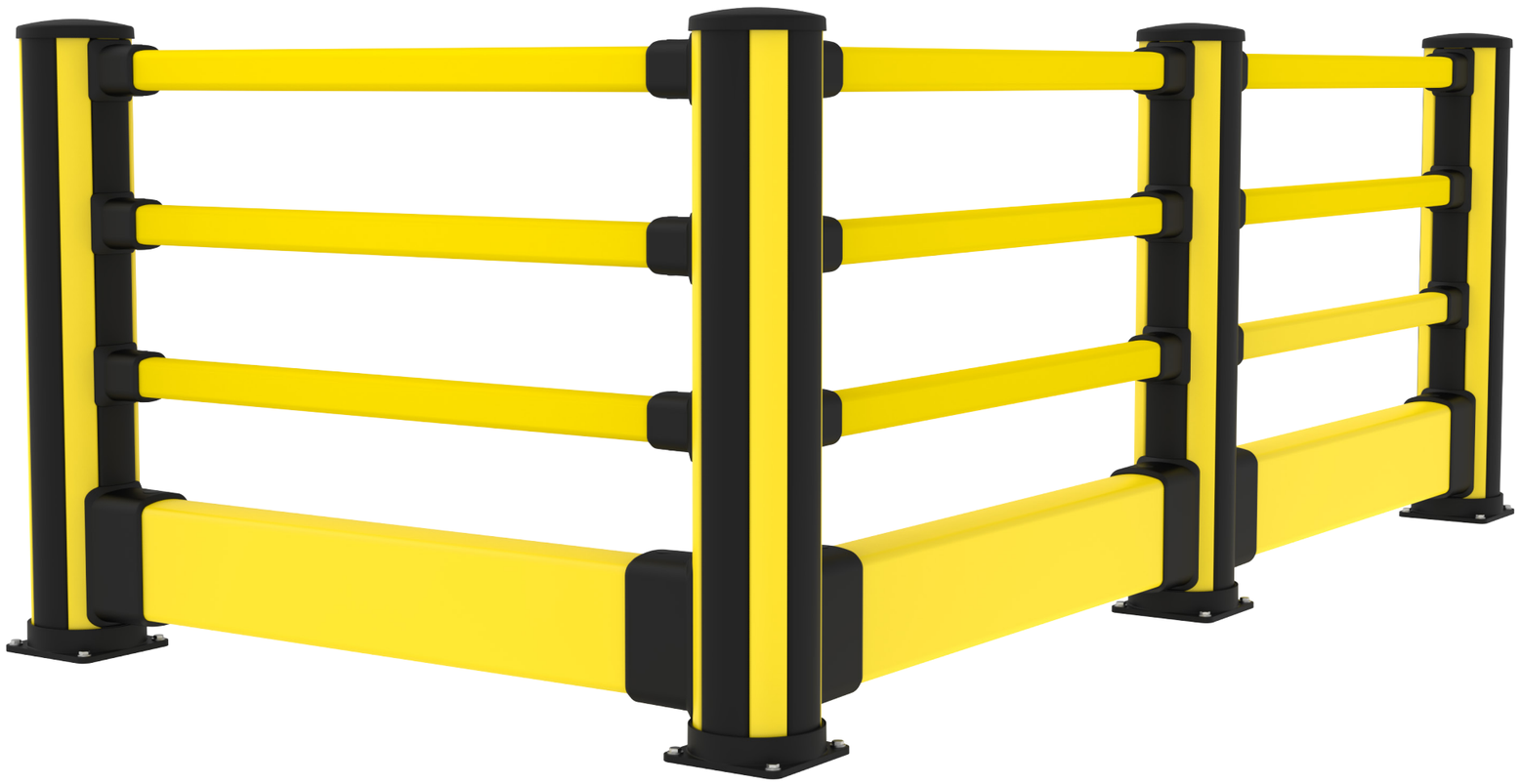

AXELENT

AXELENT AB • BOX 1
KÄVSJÖVÄGEN 17 • SE-335 73
HILLERSTORP • SWEDEN

TEL +46 (0)370-37 37 30
INFO@AXELENT.SE
WWW.AXELENT.COM

C-0017638-01| V2209_ X-Protect _assembly_manual

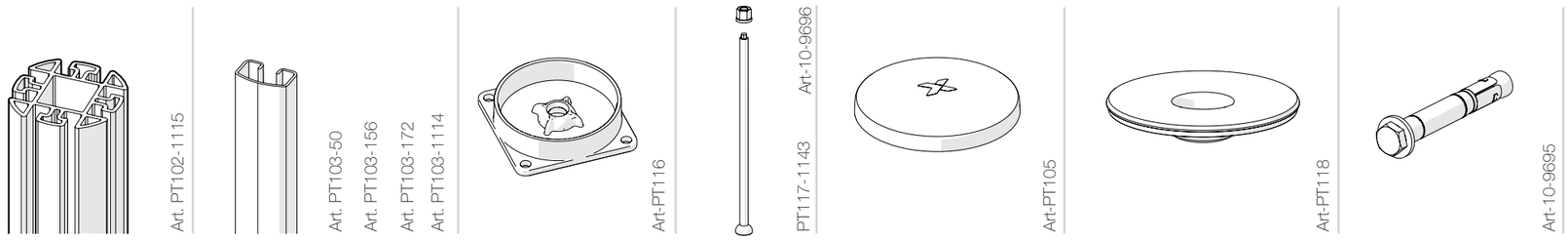

BCE0-116-I1P3	1		1	1	2	3	1+1	1	1	1	4
BCM0-116-I1P3	1		2	2	4	2	1+1	1	1	1	4
BCC0-116-I1P3	1		2	2	4	2	1+1	1	1	1	4

CCS9-000-00P1

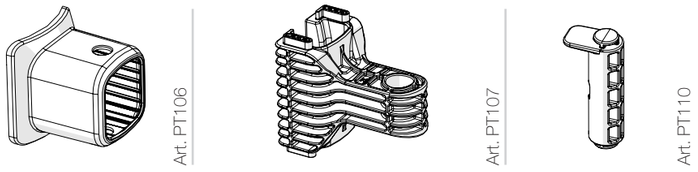

BCE0-116-I1P3	3	3	3
BCM0-116-I1P3	6	6	6
BCC0-116-I1P3	6	6	6

CCS9-000-I100

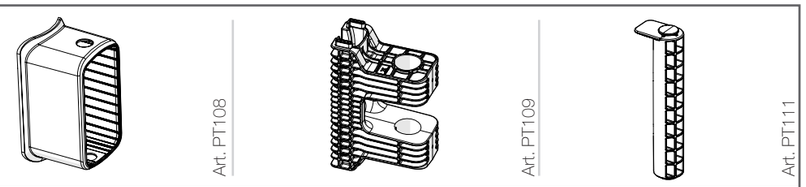

BCE0-116-I1P3	1	1	1
BCM0-116-I1P3	2	2	2
BCC0-116-I1P3	2	2	2

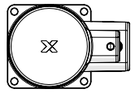

BCE0-116-I1P3

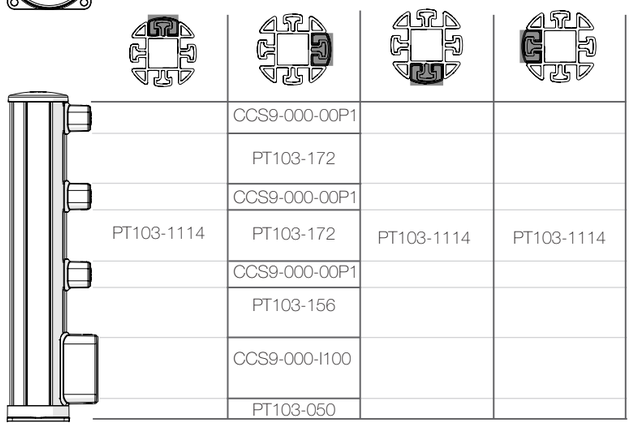

BCM0-116-I1P3

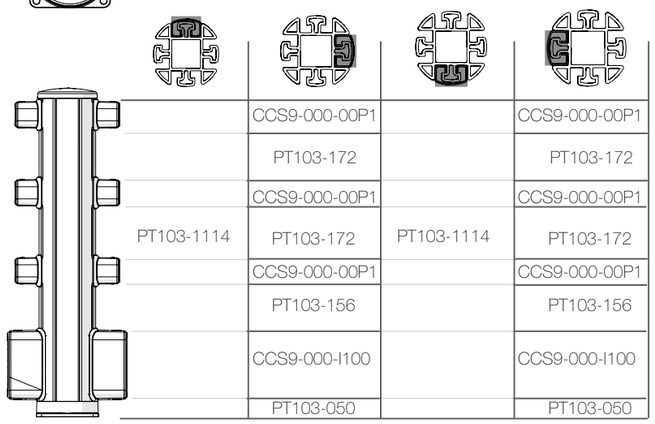

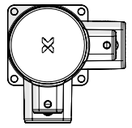

BCC0-116-I1P3

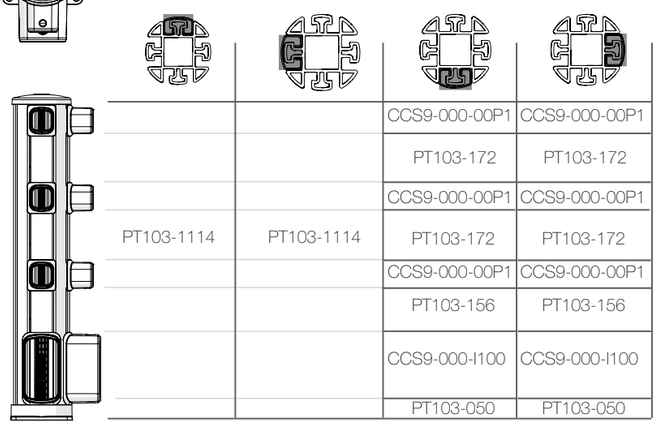

RCP1-XXX-XXXX
(RCI1-length-centre to centre)

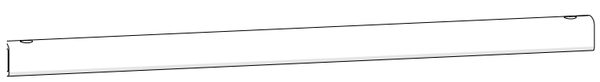

RCI1-XXX-XXXX
(RCI1-length-centre to centre)

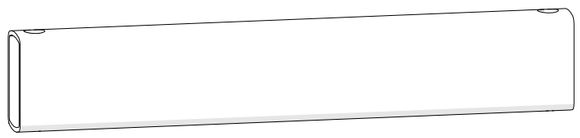

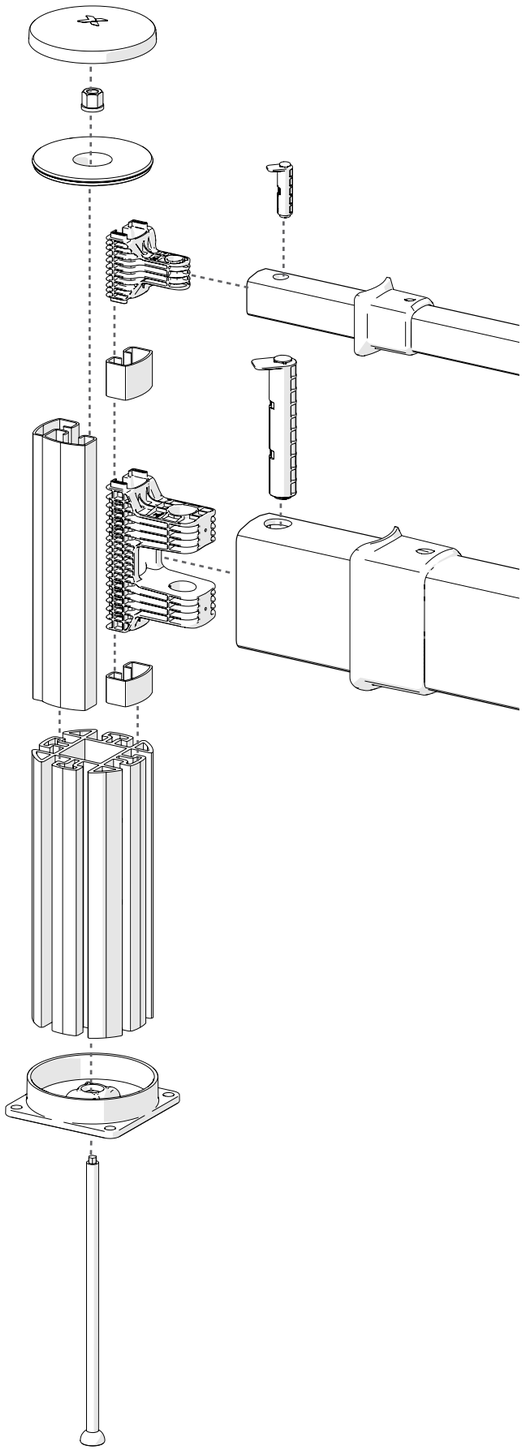

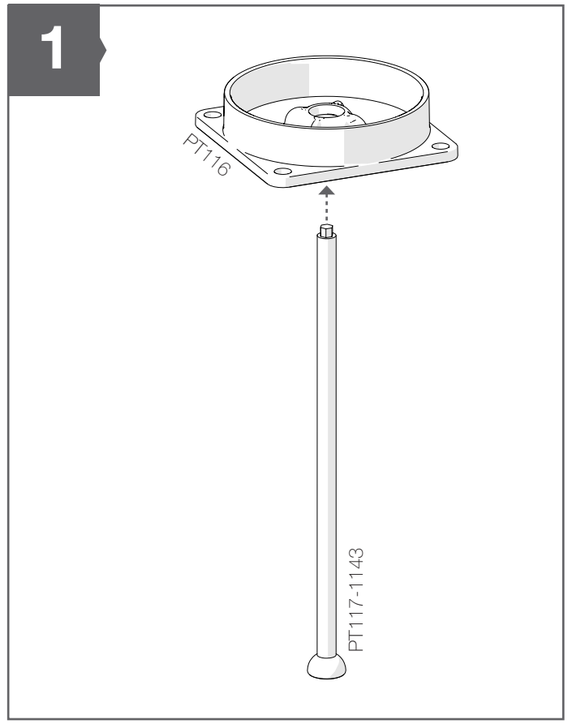
1
PT116
PT117-1143

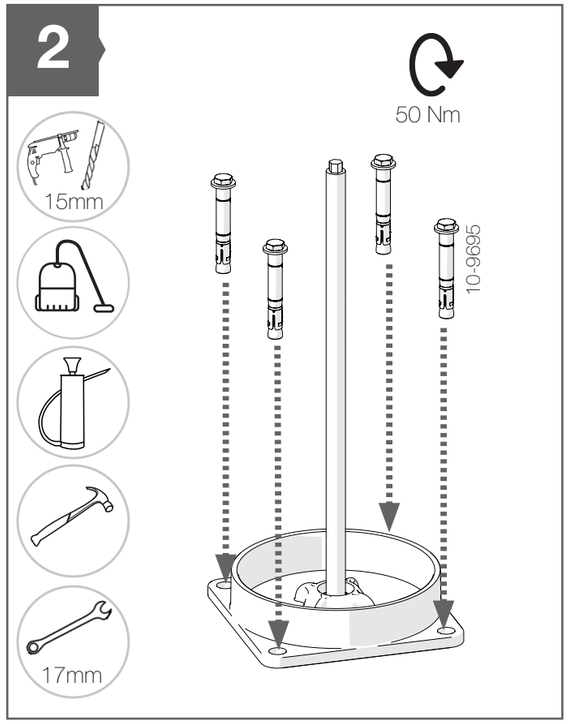
2
50 Nm
15mm
10-9695
17mm

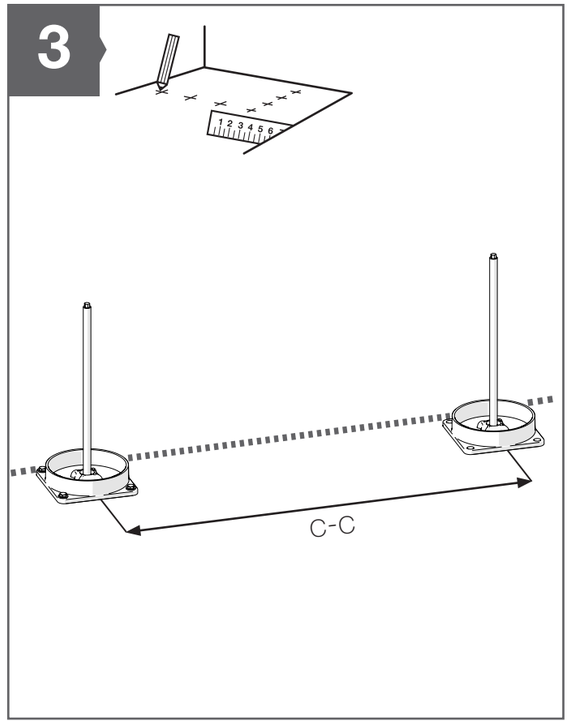
3
C-C

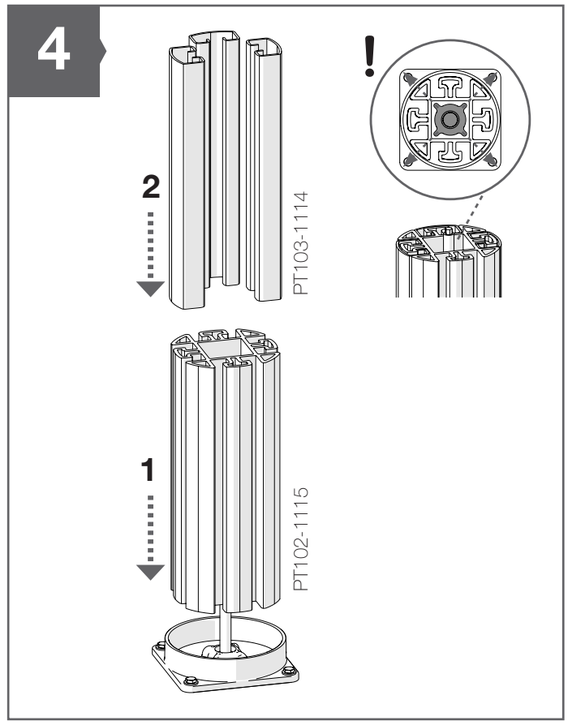
4
2
PT103-1114
!
1
PT102-1115

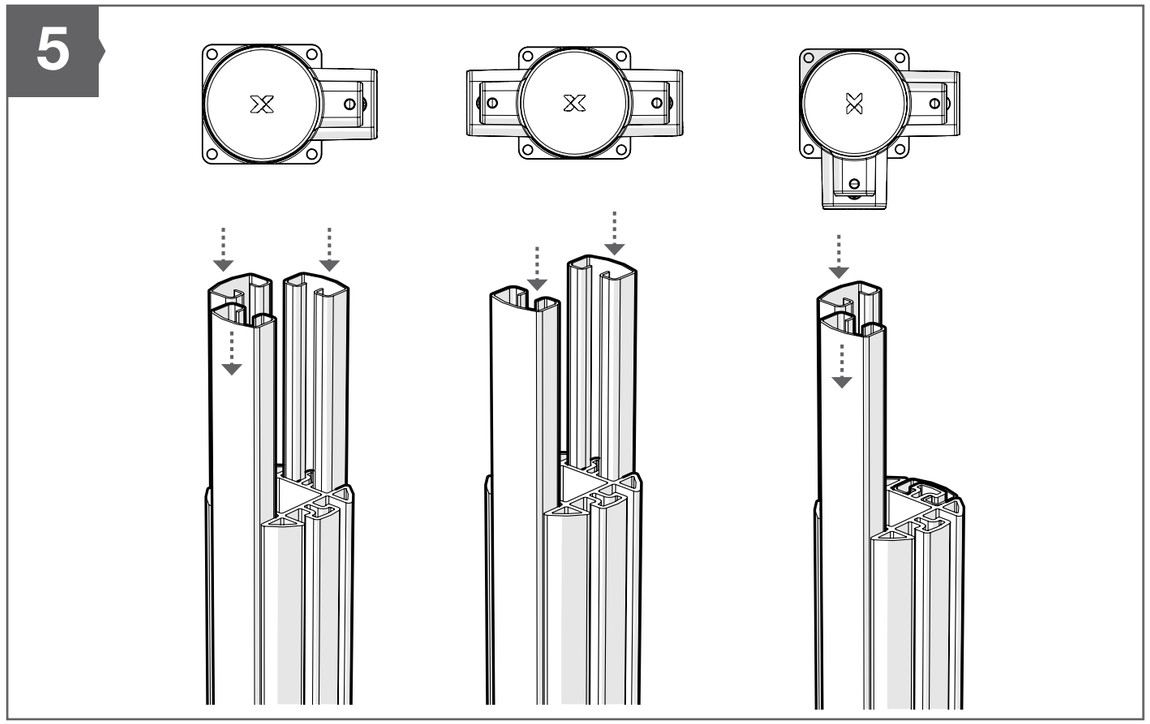
5

6A

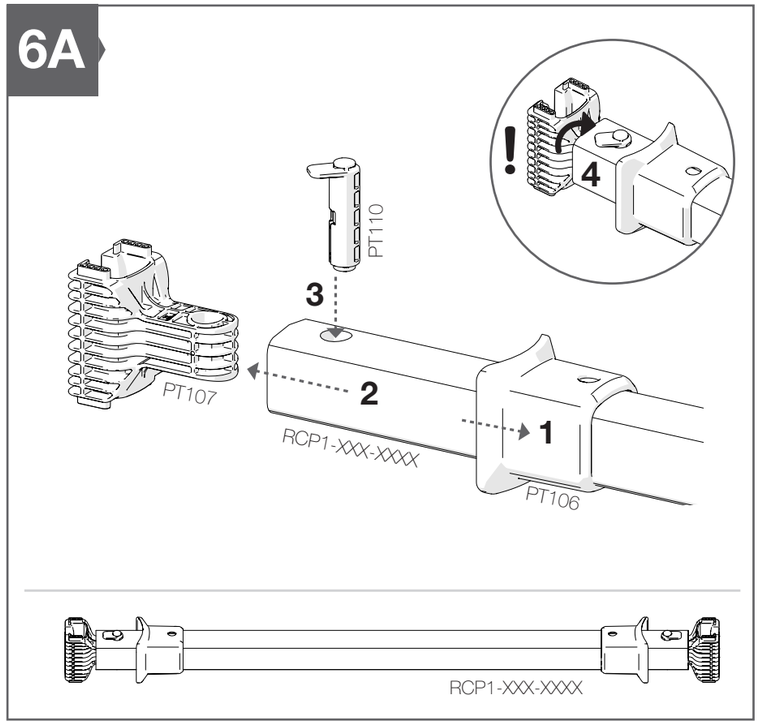

7

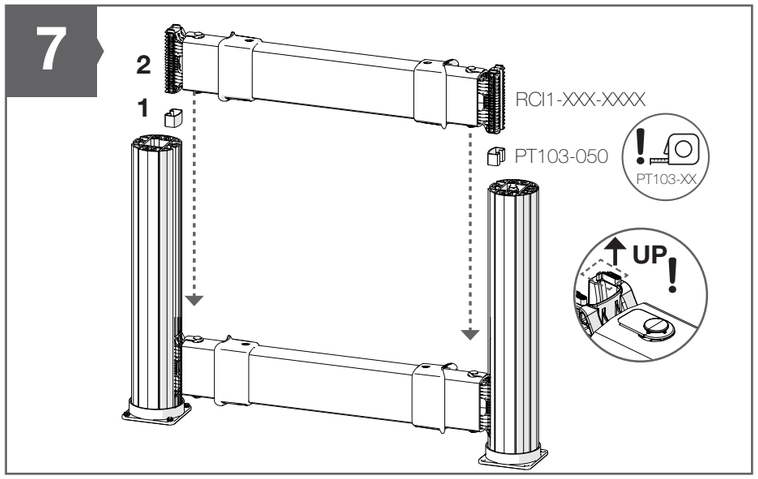

8

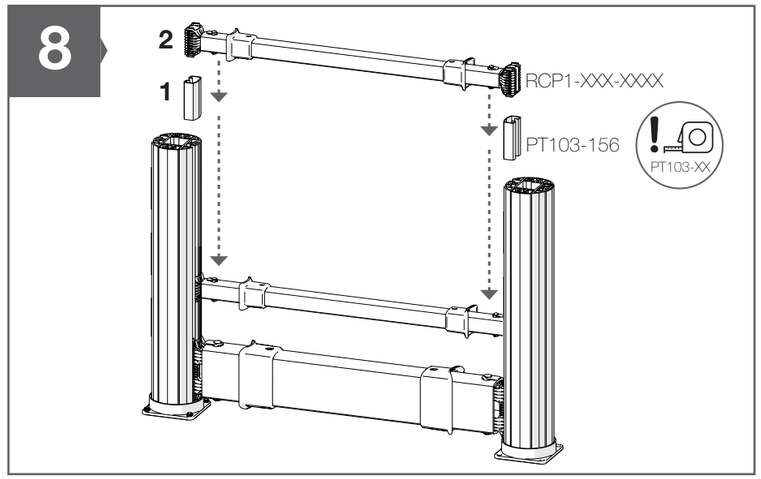

9

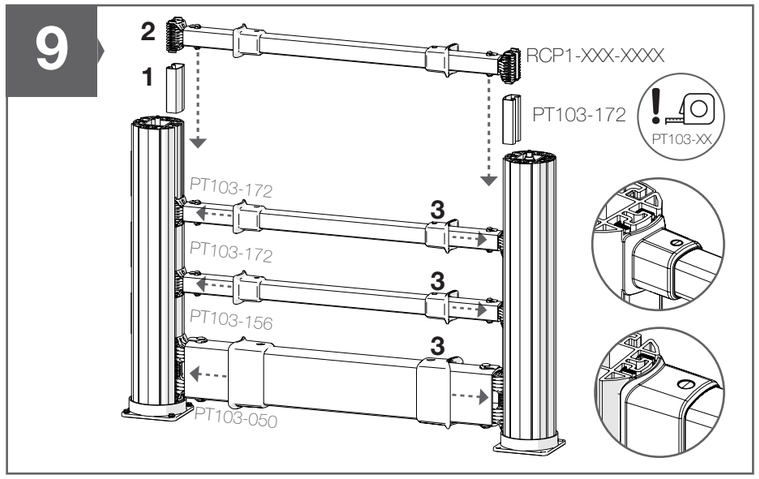

10

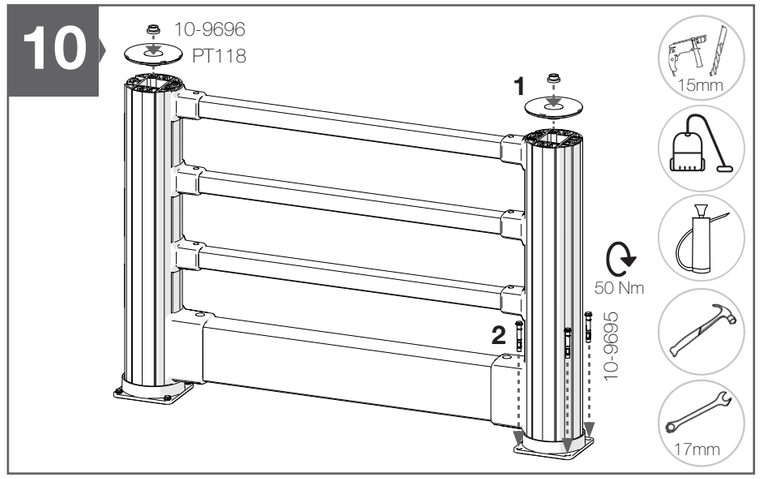

6B

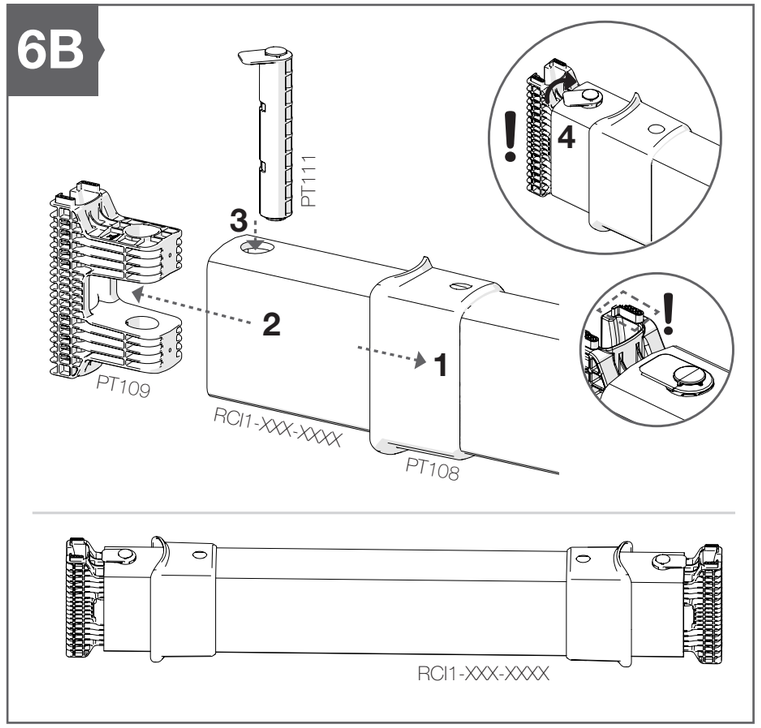
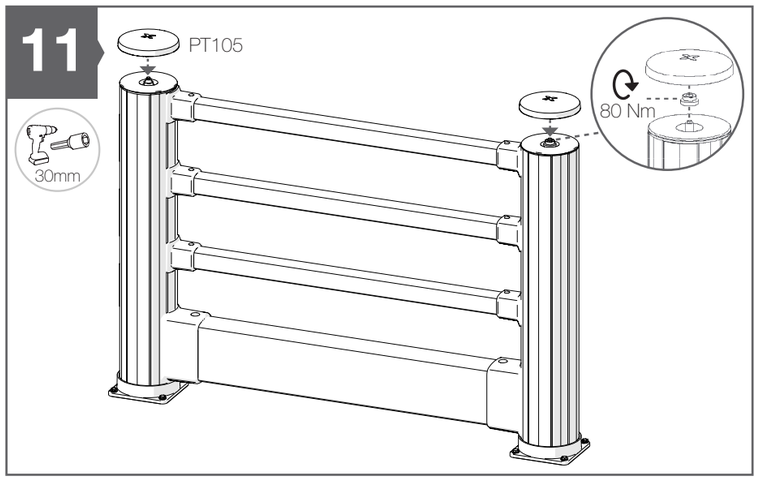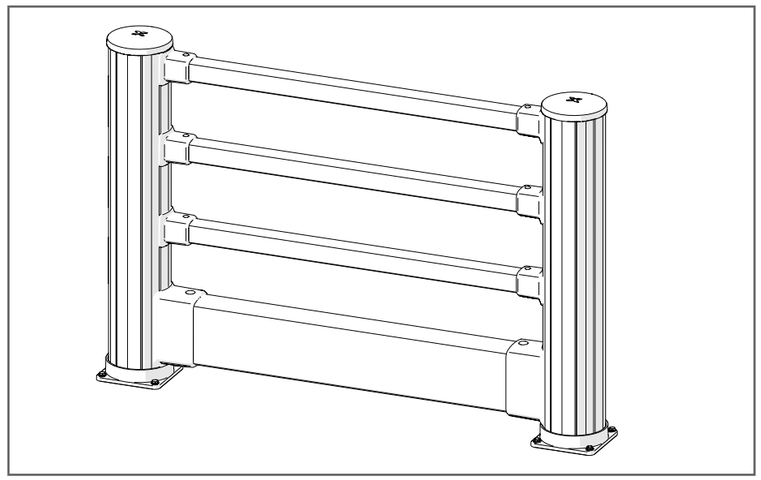
11