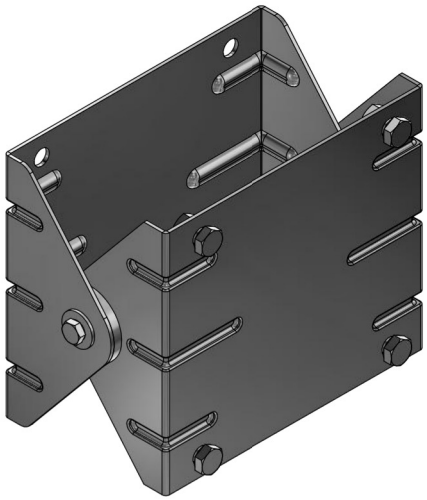

1 : 3

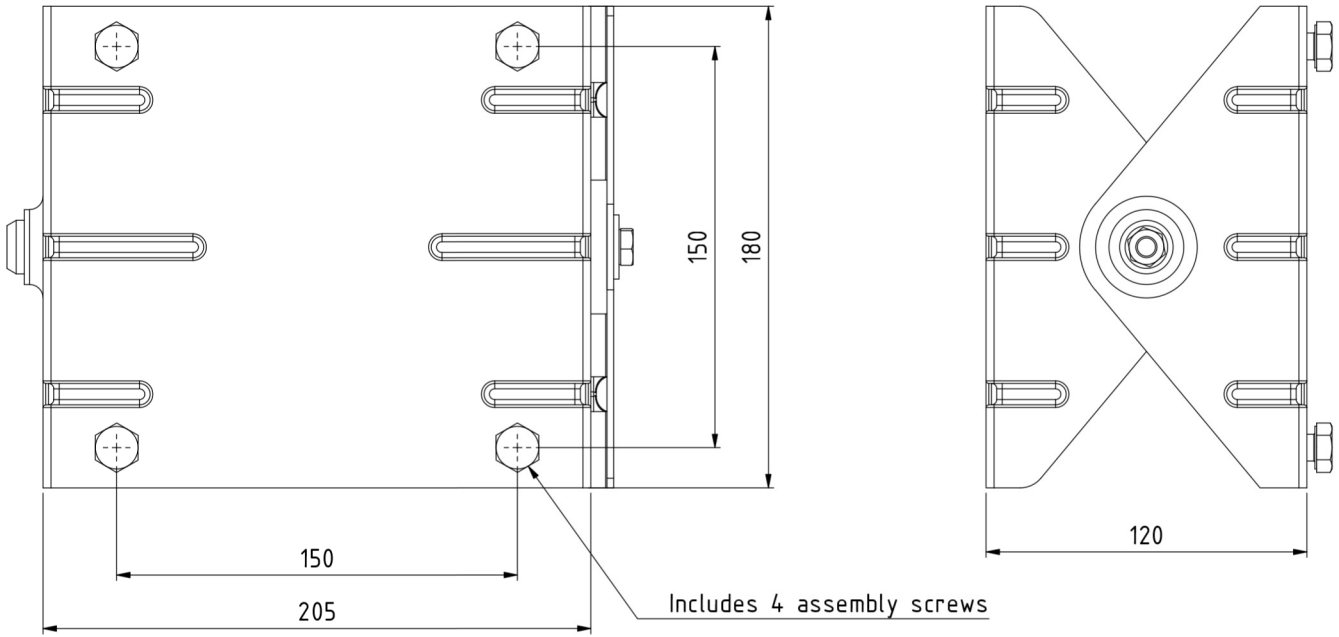

Thickness of plate 2,5mm

Item	Qty	Description	Material	Part Number
1	1	Swing bracket Midi	AISI 304 and polymer	199139502

Scale	Drawn	Checked	Appr.	ECO	Date
1 : 2	CABANLA	JOTU	JOOL	001016	2022-08-25

Assembly Drawing	Drawing No.	Issue	Sheet
	509139502	AB	1 /(1)

This document must not be copied, either completely or in part, without permission. Any infringement will have legal consequences © All rights reserved

A3